Integrated ICT-platform based Distributed Control in electricity grids
with a large share of Distributed Energy Resources and Renewable Energy Sources

Lessons Learned for the usage of the ICT Platform in demonstrators

Deliverable D9.1

Identifier:	INTEGRAL_D9.1
Date:	28-02-2011
Class:	Deliverable
Responsible Partners:	NTUA/ICCS, IDEA, BTH, KEMA, INPG, HUMIQ
Annexes:	
Distribution:	PU
Overview:	The lessons Learned in demonstrators are presented

This project is funded by the European Commission
Under the 6th Framework Programme
(Project FP6-038576)

The INTEGRAL consortium consist of:

ECN	Principal Contractor & Coordinator	The Netherlands
NTUA/ICCS	Principal Contractor	Greece
IDEA	Principal Contractor	France
Blekinge University of Technology	Principal Contractor	Sweden
KEMA	Principal Contractor	The Netherlands
WattPic Intelligent	Principal Contractor	Spain
EnerSearch AB	Principal Contractor	Sweden
INPGrenoble	Principal Contractor	France
HUMIQ	Principal Contractor	The Netherlands
CRIC	Principal Contractor	Spain
Essent	Principal Contractor	The Netherlands

Control Versions:

Version	Date	Author	Description of Changes
1.0	07-10-2010	Llani Tena	Demo B- Hardware Specifications
1.1	27-01-2011	Aris Dimeas	Updated
1.2	08-02-2011	Jörgen van der Velde	Demo A – update
1.2.01	14-2-2011	René Kamphuis	Added Demo-A Powermatcher interface
1.3	15-2-2011	Aris Dimeas	Conclusions
1.4	17-2-2011	Jörgen van der Velde	Demo A – finalized
Final	29-3-2011	Aris Dimeas	Final Version

Table of Contents

List of Figures

References

[UML]	The Unified Modelilng Language User Guide Booch, Rumbaugh, Jacobson ISBN 0-201-57168-4
[4+1]	Architectural Blueprints – The “4+1” view model of software architecture’ Phillippe Kruchten http://www.cs.ubc.ca/~gregor/teaching/papers/4+1view-architecture.pdf
[HEMS]	Cisco Home Energy Management System http://www.cisco.com/web/consumer/products/hem.html
[DoW]	Integral Annex I – “Description of Work”
[M@home]	Miele @home http://www.miele.de/international/enint/products/miele_at_home.htm
[PLAN]	Sixth Framework Programme Annex I “Description of Work” INTEGRAL August 28th 2007
[WP2.1]	INTEGRAL High-Level specification of the functionality for novel electricity distribution grids Deliverable D2.1 (Draft)
[WP2.2]	INTEGRAL Deliverable D2.2
[WP5.3]	INTEGRAL Deliverable D5.3
[WP5_SPEC]	PowerMatching City System Specification Deliverable 5.1a
[WP5_ADD]	PowerMatching City Architectural Description Deliverable 5.1b

Acronyms and Abbreviations

CA	Commercial Aggregator
OPC	OLE for Process Control
OLE	Object Linking and Embedding
DER	Distributed Energy Resources
DSO	Distribution System Operator
HV	High voltage
LV	Low Voltage
MV	Mid Voltage
RES	Renewable energy sources
TSO	Transmission System Operator

Executive Summary

During the Integral Project three field tests have been executed showing integration and orchestration of Distributed Energy Resources (DER) in the grid.

In Work Package 5 (Demonstrator A) it has been shown that under normal circumstances in the grid, the power of Renewable Energy Sources (RES) like solar power and wind can be applied without problems. Power output of the RES can be predicted to certain extent. The remaining unpredictability can be compensated by controlling the flexibility available in the grid. For example, imbalance in the grid generated by wind arriving to early can be compensated by switching on loads.

In Work Package 6 (Demonstrator B) it has been shown that flexibility in the grid can be applied under critical circumstances (degradation of power quality). When power quality degrades, devices can respond by adapting their need for power. Even a transition can be made to island mode in case of households or entire communities as was shown in this Work Package.

In Work Package 7 (Demonstrator C) it has been shown that under emergency circumstances (failure in the grid), information technology can contribute to detecting the failure, isolating it and restoring that parts of the grid that can be revived when the failure is isolated.

Deliverables 9 are concerned with the architecture of systems and software in which these three mechanisms co-operate and can be rolled out in large-scale situations.

This document D9.1, the first deliverable of Work Package 9, is concerned with the lessons learned from the field trials. During the field trials the concepts were shown. Due to the research nature of the experiments, dedicated systems were designed. In order to be able to roll out on large scale, adaptations and simplifications must be made. This document describes these lessons learned from the field tests.

Deliverable D9.2 will be concerned with the overall system and software architecture. D9.3 focuses on the data model to be use. D9.4 is dedicated to the Agent technology that is underlying the experiments.

1. Introduction

1.1 Goal

The goal of this document is to provide input to the next deliverables (D9.2, D9.3 and D9.4) analysing the lessons learned in the three demonstrators. The key element is to identify and analyse the primary differences in the structures of the three demonstrators. More specific this analysis will focus on the technical requirements that formed the ICT configuration in each system and how these requirements affect the overall architecture. Finally the analysis of each system should not focus on the demonstrators but on real system deployment. For example what are the requirements of deploying the system developed for Demo C: what communication protocols should be supported, what are the response times, etc

1.2 Scope

This document is one of the public deliverables of the Integral Project.

2. Demo A

2.1 Short Description

2.1.1 Introduction

The Demonstrator A System (the System for short) was created to facilitate the execution of INTEGRAL Demonstration A. This Demonstration A has been described in the project plan [PLAN] and work package 2 description ([WP2.1] and [WP2.2]).

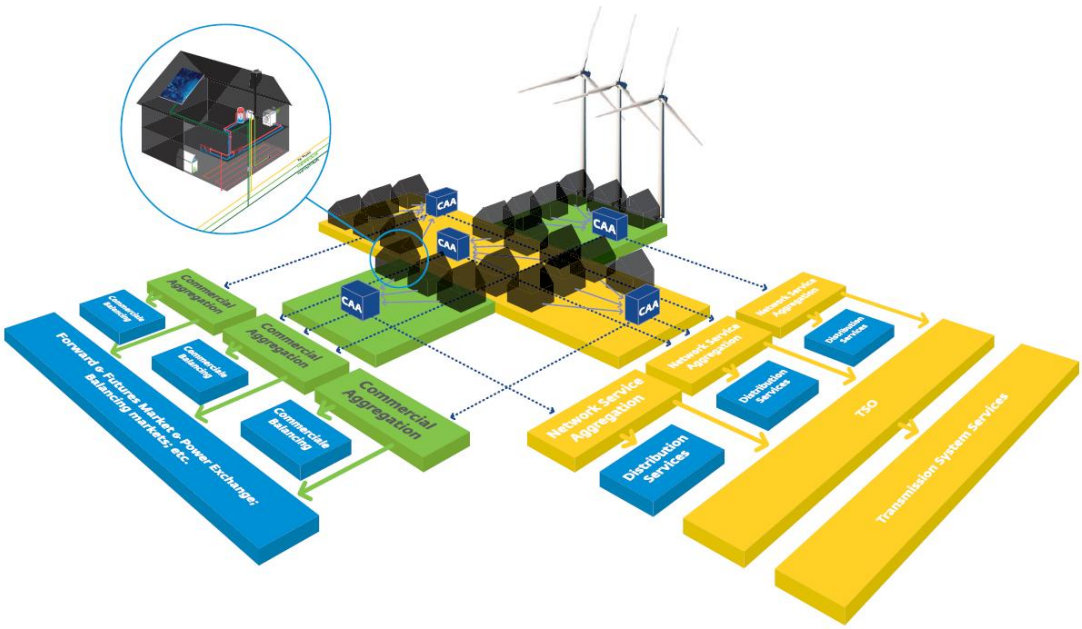

Figure 2-1 In Demonstrator A households are served by two parties: distributors and electricity markets

As described in [WP2.1] and shown in **Error! Reference source not found.** a dual market view is adopted in which 3 stakeholders operate:

- The Prosumer
  The Prosumer or household want to economically use energy and get the best application for Renewable Energy Sources (like solar panels)
- The Commercial Aggregator (CA, e.g. an Energy Service Company)
  The CA is interested in keeping delivery of energy conform contracts. Reduction of imbalance (own or the national imabalance) is part of this.
- Local Distribution System Operator (DSO)
  The DSO uses the system to keep

During the implementation the stakes of the Prosumer and Commercial Aggregator (in casu Essent) were implemented as real as possible. Connections were made to Consumer devices. Connections to electricity markets were established. The Distribution System Operator was represented by an Agent based on simulated grid load figures.

2.1.2 The main concept: PowerMatcher

To cope with the different stakes, which may be clashing, the PowerMatcher concept was implemented. By creating PowerMatcher networks to which all stakeholders and devices are connected (Figure 2-2**Error! Reference source not found.**), it has been shown in [WP5.3] that stakes were granted as effectively as possible.

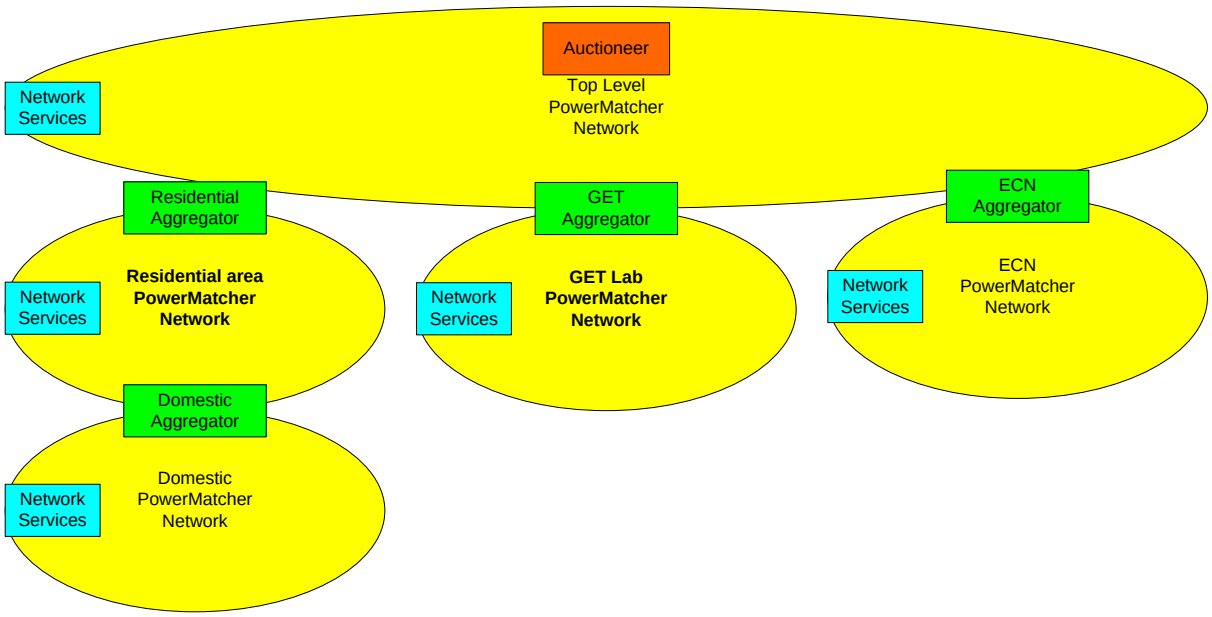

Figure 2-2 PowerMatcher networks as scalable concept to manage large numbers of devices

2.1.3 The PowerMatching City system

In order to execute the concept and to gain understanding a system was created as described in [WP5_ADD]. Software was written implementing the required functionality. The high level structure of the software is shown in Figure 2-3.

Apart from executing the PowerMatcher concept, provisions were implemented to

- Collect data for analysis, ranging from reading energy meters to logging of message exchange between device components;
- Inform the participating households by means of a web portal;
- Monitor the system at device level;

A data repository (the *Measurements and Logging* component) fulfilled an important role of collecting data and information.

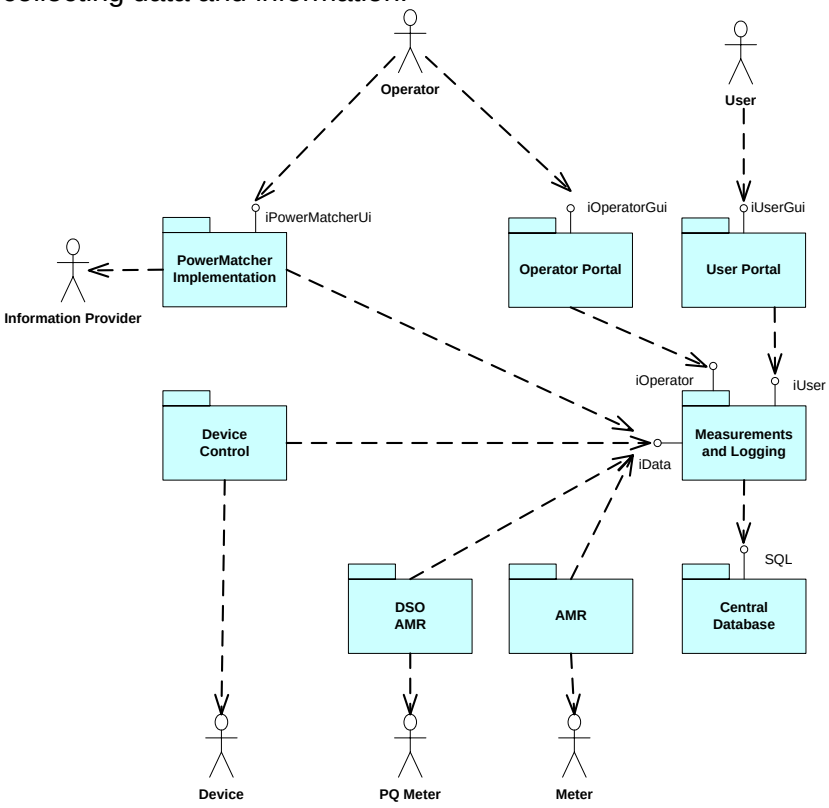

Figure 2-3 First level of decomposition of the software

Entity	Responsibility
PowerMatcher Implementation	The main concept for coordination of control of the distributed system of devices and installation is the PowerMatcher. This component implements the PowerMatcher entities, like the Device Agents, Auctioneer, Aggregator and PowerMatcher Network Services.
Measurements and Logging	This component plays the central role: it implements a generic mechanism for storage of logging and measurements.
Operator Portal	The *Operator Portal* is a web application offering functionality to monitor and control the system to the operator. It can be used to have overview over the system on a daily basis.
User Portal	The *User Portal* is a web application offering information to the User (Prosumer, CA, DSO)
Central Database	A main stream COTS database is used for storage of all data
AMR	Automatic Meter Reading. Reading out of additional meters.

DSO AMR	Performs reading out of power quality meters for measuring load on the transformers or low-voltage grid
Device Control	The *Device Control* component is responsible for reading and updating the state of the devices. Device readings are stored in the *Measurement and Logging* storage. State changes are read from *Measurement and Logging* as configuration and are communicated to the *Device*.

2.2 System Requirements for the Demonstrator A

2.2.1 Hardware Requirements

During implementation of Demonstrator A an hardware infrastructure was chosen that fulfilled the main needs of the project. These needs were:

- Demonstrate integration of DER/RES in a smart grid under normal circumstances
- Collect measurements for analysis
- Use Consumer-Of-The-Shelf components instead of designing

When preparing for large scale roll-out the needs will vary:

- Roll-out a system that integrates DER/RES in a smart grid
- Use tailor-made and designed-for-the-purpose components to keep costs down.

This has a number of implications.

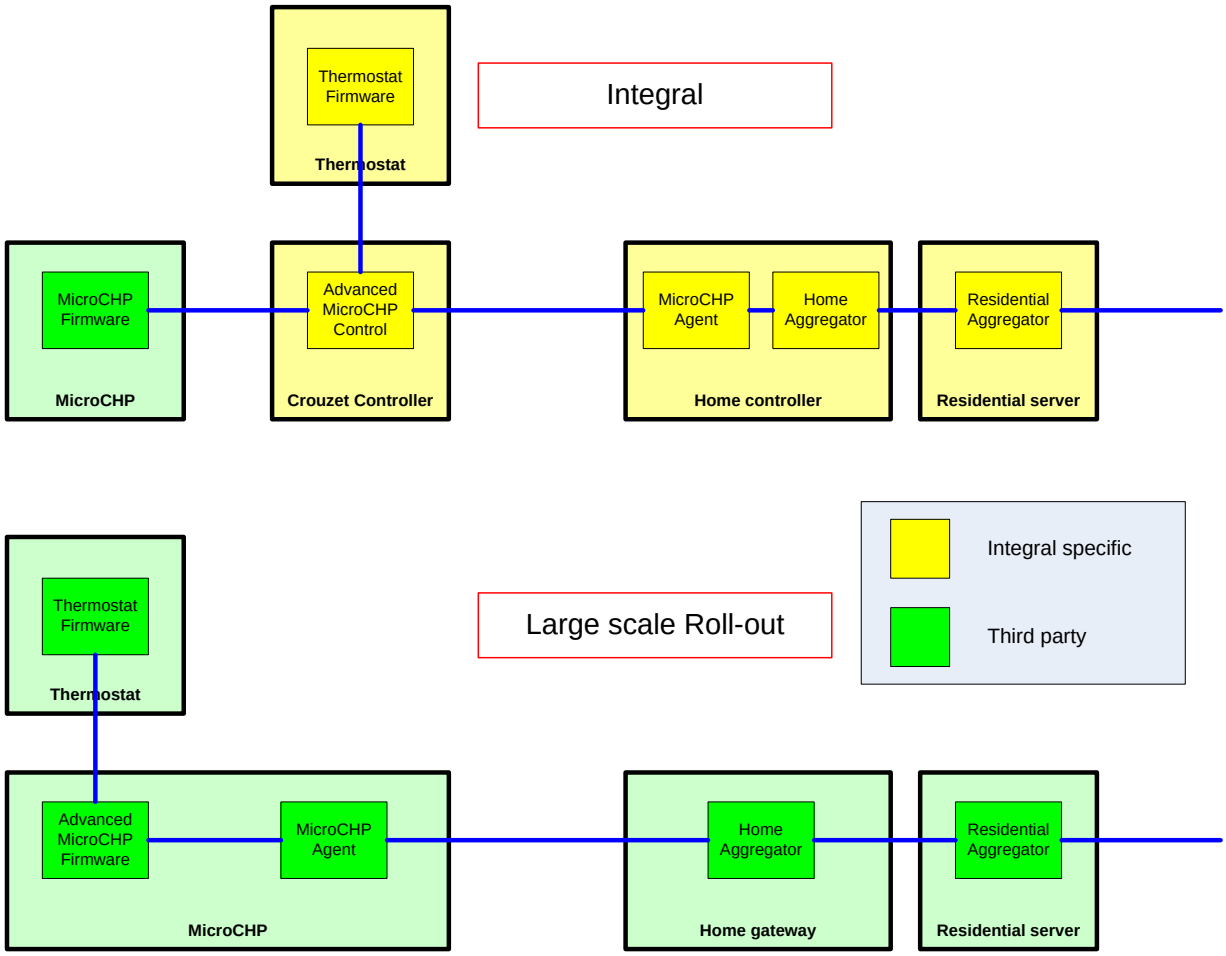

Figure 2-4 Hardware components in the household

Figure 2-4 shows the hardware platforms in the household that are involved in controlling the MicroCHP. The upper picture shows the set-up as has been implemented for Integral, the lower picture shows the situation as it should be for a large scale commercial roll-out.
Green coloured components are third-party components, yellow components are components that have been implemented for Integral.

- A dedicated controller was created for controlling the devices, in casu the MicroCHP. Eventually, we believe the required functionality will be implemented on the controller in the device. This requires involvement of device manufactures and standardisation of technology.
  This trend towards involvement of device manufacturers is already visible: during the field trial Miele @Home laundry machines were integrated in PowerMatching City [M@home]. These devices offer remote control and were placed under control of a PowerMatcher Agent.

- The Agents for the devices were implemented on a separate PC (Home Controller). Most probable, the Agents will be implemented in the device itself.

- We foresee a Home Gateway device. The Home Gateway form the logical aggregation at household level. This trend is already visible. Large market parties become involved. An example is the Home Energy Management system of Cisco

Figure 2-5.

- As implemented during the field test we foresee a residential aggregation level. This level corresponds with an urban area with industry and households, for example an area fed by a sub-station.

- As implemented during the field test we foresee higher level aggregation, for example at city level or even at province or country level.

- In order to accomplish large scale roll-out, the expensive VPN and (dedicated) ASDL connections that were used during Demo A must be replaced by less expensive variants, for example by using the broad band internet connection of the household.

Figure 2-5 Example: CISCO Home Energy Management System

2.2.2 Software Requirements

As was shown in Figure 2-3 a dedicated software structure was created that not only implemented thePowerMatcher concept, but also implemented the provision required for PowerMatching City.

<u>PowerMatcher</u>

The test provided us with a wealth of data to optimize and tune working of the PowerMatcher. Currently, together with commercial parties, further developments are underway to minimize the footprint of the hardware and software of an agent to just a number of tenths of kilobytes and to reduce the cost of a node to a <5 $ price. This means that very valuable, but expensive provisions in the software of the field-test like local and central databases, using database triggers for inter-process communications and extensive interfaces to items like the Crouzet, controlling the heating system with a very heavy –legacy- functionality, become obsolete. These are replaced by single one-chip solutions, that are able to communicate through one of the many standard protocols available for in-home and device-to-device communication. Ultimate goal is to have the agents implemented in the grid at the right level, as viewed from the particular business case. Getting to the higher levels in the agent hierarchy (concentrator, auctioneer), direct physical implementations are replaced by implementations in the currently

rapidly developing computing cloud field using rapidly appearing protocols and service models in the ICT-arena.

Data Storage

As stated at various level in the software architecture data storages are implemented. The reason for these storages were:

1. Storage of measurement and operational data for analysis
2. Interfacing between components, in casu the Device Contollers and Agents
3. Storing of information on the status of the system

Ad 1: In an large scale roll-out it is no longer necessary and possible to store large amounts of measurements. More appropriate provisions for storage will be needed:

- At lower levels in the system logging to files will be sufficient
- At higher level *aggregated* information will be stored, like meter data

At 2: We believe agents will be integrated in device controllers, directly interfacing to the hardware. Therefore database as interface in between will no longer be necessary.

Ad 3: At high level in the system some characterisation of the underlying system remains necessary. For example, the aggregated amount of flexibility needs to be known. This information has an aggregated character, whereas the status information in PowerMatching City had a more detailed character: at the central data store device level status information was collected. Devices will become mature so this monitoring is no longer necessary.

Meter data collection

In practice we see 'smart meter' solutions being rolled out. In the Netherlands smart meters adhere to the NTA8130 standard **Error! Reference source not found.**. A meter has two ports (see Figure 2-6) by which data can be extracted, the P1 port and the P3 port. The P1 port is meant for domestic use. It provides metering information every 10 seconds. The P3 port is for billing purposes. It provides data once a day via a secure connection.

For our application it is necessary to have meter data available every few minutes. For this purpose we used the P1 port. If however in a large scale implementation the consumer is going to be billed at such intervals, data over the P4 port should have a similar granularity. Currently the NTA8130 does not provide this.

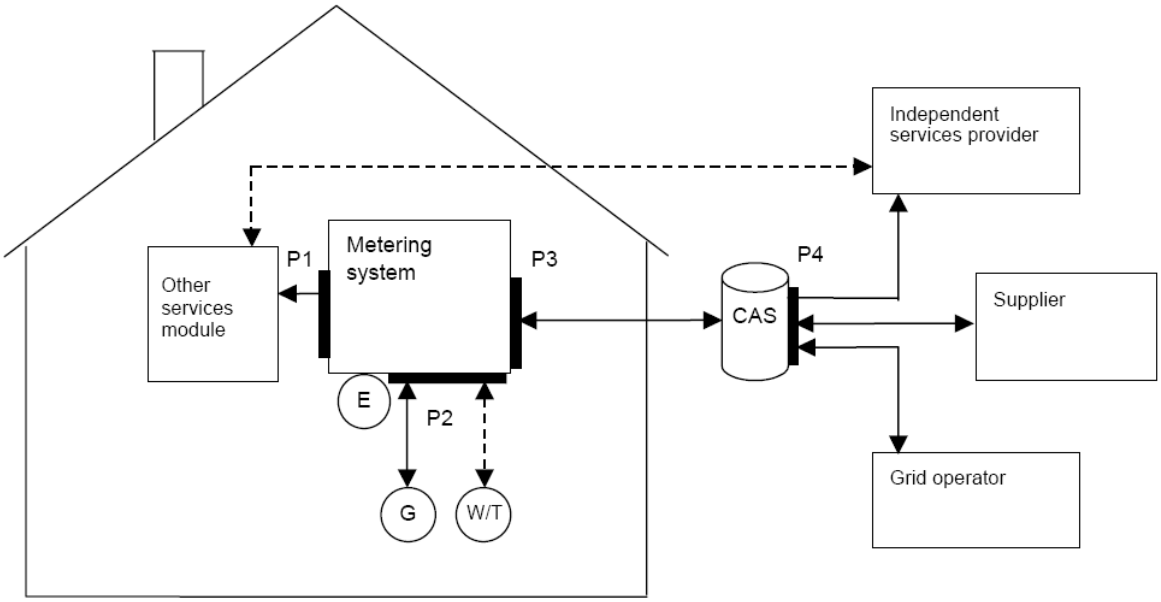

Figure 2-6 NTA8130 smart meter communication model

Portals

Two portals were implented : a portal for the participating consumer (user portal) and a portal for the operator (operator portal).

The user portal will become more important. This trend is visible in the market. Following functions will be provided by the user portal:

- Provision of on-line energy data like usage data, bill information
- Control and configuration of own energy system components
- Administrative services, like subscribing or unsubscribing to a service

While during PowerMatching City a web portal was used, other forms are possible like mobile portals (dedicated to mobile devices) and home terminal (like the one on Figure 2-5).

The mobile device (smart phone, tablet PC) is a logical platform for the portal, since it is available to the user most of the time. Therefore an implementation was created for PowerMatching City (Figure 2-7).

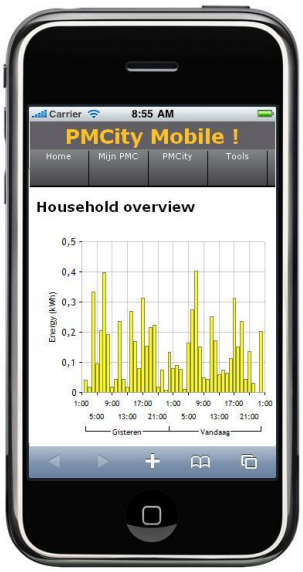

Figure 2-7 Mobile user portal for PowerMatching City

The role of the Operator Portal will shift from monitoring inidividual devices to monitoring the overall behaviour. Monitoring device functioning will shift towards the devices, who report to the user if problems exist (e.g. by means of a display).

2.2.3 Communication Protocols

The choice of the communication protocol is driven by the business model/application logic. For the physical electricity infrastructure, defining PowerMatcher electricity nodes in the IEC 61850 object structure and utilizing the IEC-61850 stack mapping on the OSI model, would yield a transparent communication medium independent of the physical communication paths. Mapping objects on the UCA/CIM database model, would then provide for portability to existing distribution company ICT-applications like SCADA-systems. Such an approach is currently investigated in the FP7 EU-project Web2Energy (www.web2energy.com) However, providing appliances at lower levels in the grid with an IEC-61850 stack would be a considerable overshoot leading to far too high costs. In the building management sector standards like SOAP, XML, BacNet, Lon and Modbus are candidates and are being used already very heavily. For appliances, the Association of Home Appliance Manufacturers (AHAM) recently published findings of a technical evaluation of communications protocols for smart grid enabled home appliances. The results are based on a technical evaluation of numerous existing technologies designed for the Application (APP), Network (NET), and Media (MAC, PHY) layers of communications protocols. For the Application layer, SEP 2.0 and OpenADR scored the highest. Across the physical, media, and network layers evaluated, WiFi, ZigBee, and HomePlug Green PHY scored the highest. The assessment presents a clear position by the home appliance industry that the preferable communications architecture at this time features a hub that can communicate using common protocols and serve as the bridge to other devices on the Home Area Network (HAN) as well as to IEC-61850 on higher grid levels.

2.2.4 Interaction with the actors

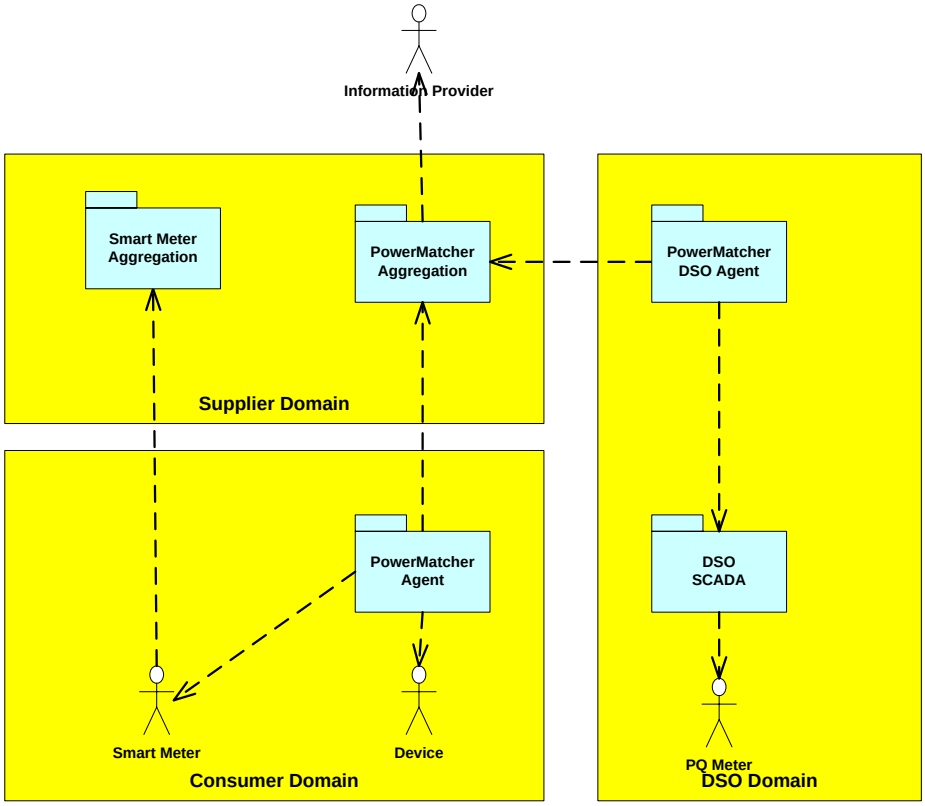

Figure 2-8 Actor domains

Figure 2-8 shows the ideal interaction between actors : communication between the domains is taken place by means of PowerMatcher messaging. Within the domain local solutions exist to acquire the necessary information for the PowerMatcher entities to execute their function. For example a DSO Agent needs information from a SCADA system on the load of the grid or transformers.

2.2.5 Input & Output Data Requirements

Once stripped, PowerMatcher operation boils down to the following component data exchange in the ICT-network:

- NetworkOfficer This component manages the PowerMatcher cluster. The architectural approach is to have agents discover auctioneers in their vicinity. So, the Agents and the Matcher use this component to find each other in a bottom-up, agent directed way. Data exchange is necessary to implement functionalities that include administrative ones like who-is-connected-to whom, finding matchers for agents, actor role administration, connection-loss detection and restoration, watchdog management and discovery of services for various business models. Building blocks for above functionality are contained in existing frameworks like C#/.NET and Java at higher levels, but also in small embedded operating systems like tinyOS and protocols like MQTT-s. The information exchanged is heavily distributed in the network, residing close to actor in scope, and does not involve large amounts of data.

- Agent functionality. Agent service functions include notification, that the current price information that has been changed by the matcher, Requests for the most recently calculated bid. The matcher will request a bid periodically in a non-event-based configuration and dependent on the developments in the price in event based modes..Furthermore, there are a limited set of functions to retrieve primary process parameters from agent controller. The agent<> auctioneer interplay request a very limited bandwidth in the order of a hundred bytes in both directions.
- Auctioneer functionality. This item is able to register agents, update bids from agents, retrieving aggregated bids from concentrators. Furthermore, some diagnostic functions to check and tune the market mechanism are available.

At this moment, the protocol is under further development with industrial partners from ICT, the electricity industry and appliance manufacturers.

3. Demo B

This control approach may support several aspects of DG and controllable loads operation and is based in the ZigBee regarding the hardware and the Multi-Agent System (MAS) technology regarding the software. This control approach also focuses on a concept called Microgrid. The application is based on the Jade platform. JADE is a software middleware that allows an easy development and deployment of a multi agent system. This tool provides all the software infrastructure and common functionality that allow developers to focus on the application logic and ontology definitions. Furthermore, it also provides the tools needed for agent system deployment, debugging and monitoring.

The decentralized control concept means that the agents control DER and DG with a certain level of autonomy.

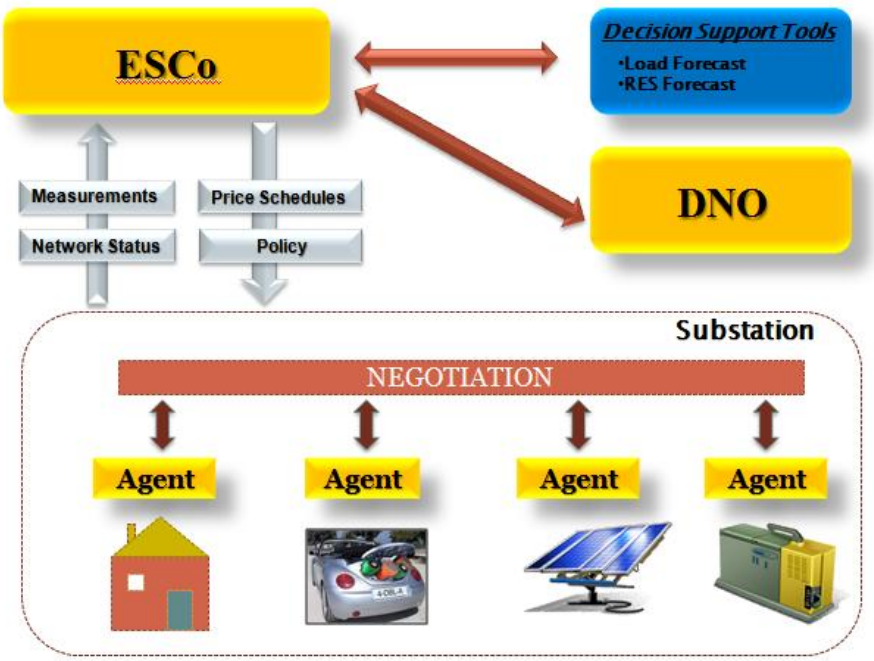

Figure 3-1. System Overview.

The main idea is that the ESCO interacts with the agents via price schedules. The agents according to the level of their intelligence may have the ability to negotiate with each other or they simply interact with to the prices independently. It is far beyond the scope of this paper to explain the differences in the various possibilities. As a general comment, one can say that if the amount of information in a collaborative system increases, then the solution may be closer to the optimal and complex operations are possible. However Peer-to-Peer communication suggests a more complex and expensive solution.
The idea of agent based control provides several benefits to the system. The main benefit is that each agent may perform several tasks for the system that it belongs to. For example the agent may interact with the ESCO in order to react to price schedule and at the same time communicate with the Substation, via an agent called MGCC-Microgrid Central Controller, in order to ensure congestion avoidance.

The system is Demo B enables the following agents:

1. House Agent
2. PV Agent
3. Diesel Generator Agent
4. Aggregator Agent
5. Jade Platform Agents (DF & AMS)

Each one of these agents controls a part of the system; the negotiation between them is the actual scope of this demo. The application architecture is presented in the next figure:

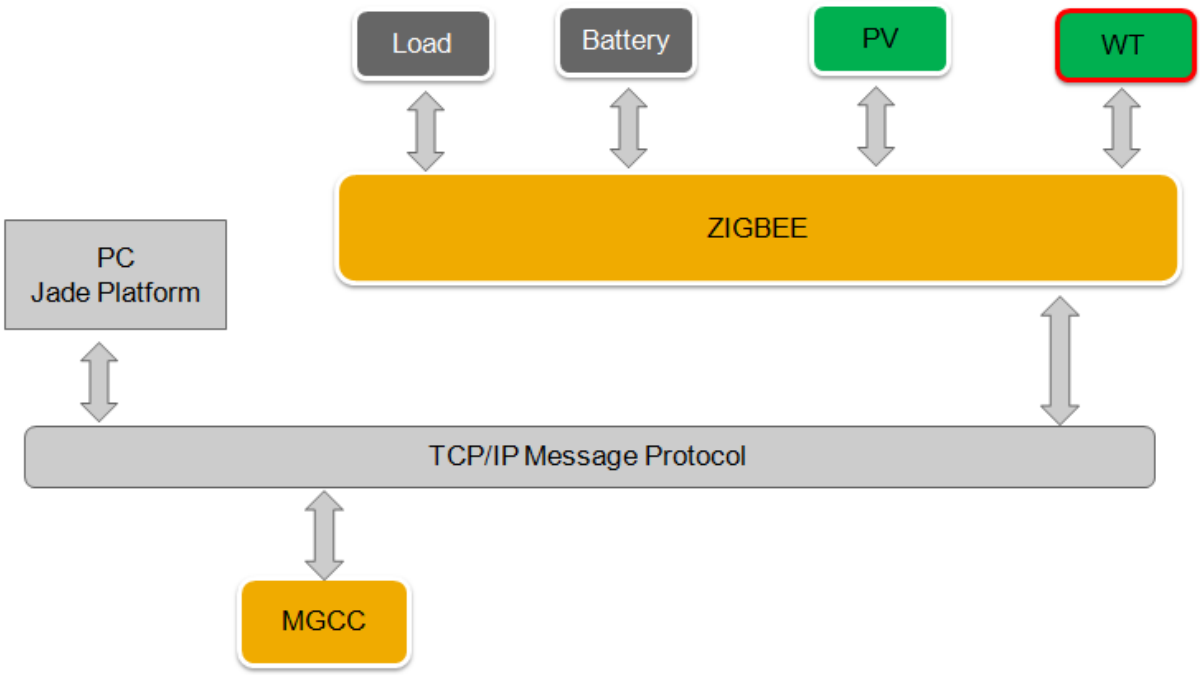

Figure 3-2. Application Architecture.

All the equipment as well the aggregator will be controlled (represented) by agents. The aggregator is responsible for the data collection and evaluation in order to define the system status. Furthermore it will coordinate the negotiations between the agents. In order to guarantee a right performance and stability of the micro grid is necessary an intelligent Demand Management System (DMS) which can anticipate and predict these potential situations and make the proper decisions as for instance connecting emergency generators or battery bloc or cut off non priority charges, always on a speedily and reliable way.

3.1 System Requirements for the Demonstrator B

3.1.1 Hardware Requirements

The Demo B in the INTEGRAL project aims to provide solutions under operation critical conditions (OCC) for the Integrated ICT-platform based Distributed Control (IIDC) in order to improve the microgrid design and performance under real cases.
The OCC conditions could be reproduced for an energy production or consumption random situation (e.g. when a generator power microgrid-connected or transformer gets damaged, when a high inductive charge is connected, etc.), also for critical meteorological conditions or potential grid cuts off.
In order to guarantee a right performance and stability of the micro grid is necessary an intelligent Demand Management System (DMS) which can anticipate and predict these potential situations and make the proper decisions as for instance connecting emergency generators or battery bloc or cut off non priority charges, always on a speedily and reliable way.

A network of devices with sensitive capability, here referred as meter nodes, provides the DMS with the necessary information on diverse electrical grid parameters through a radiofrequency (RF) communication link. The communications among network devices relies on ZigBee protocol, a high level communication protocols using small, low-power digital radios based on the IEEE 802.15.4-2003 standard. ZigBee is targeted at RF applications that require a low data rate, long battery life, and secure networking.

3.1.1.1The Meter Nodes

A meter node is a small electronic device that is installed between the mains power outlet and the electrical load. It is capable of making measurements on the line voltage and frequency as well as connecting and disconnecting the load by means of a relay. When the load is connected to the grid, the meter node can measure the current drained by the load and calculate the power consumed and the power factor. These are the minimum set of data required by the DMS in order to make the decisions, however, information on more grid parameters may be extracted (peak current and voltage, fundamental and harmonic active power, etc.).
The meter nodes are equipped with low-power, short-range digital radios which allow them to transmit the acquired data to and receive commands from the DMS server.
A meter node can be configured as a simple measurement device or as a measurement and actuating device and can be powered directly from the AC mains or from a battery, depending on its configuration and duty cycle.

3.1.1.2Meter Node's Hardware

The hardware of the meter nodes has been developed so that one unique printed circuit board (PCB) can perform different functionalities according to the electronic components mounted on it. This solution provides flexibility and simplifies the design and manufacturing management processes although it requires a more complex design. The schematic of the complete board as well as images of the board with the main components mounted on it can be found in Annex I.

3.1.1.3Electrical parameter data acquisition

The acquisition of values for the different electrical parameters is carried out by the CS5463, a single phase, bi-directional power/energy integrated circuit. The CS5463 (Fig. 1) is an integrated power measurement device which combines two ΔΣ analog-to-digital converters, power calculation engine, energy-to-frequency converter, and a serial interface on a single chip. It is designed to accurately measure instantaneous current and voltage, and calculate VRMS, IRMS, instantaneous power, apparent power, active power, and reactive power for single-phase, 2- or 3-wire power metering applications. To facilitate communication to a microprocessor, the CS5463 includes a simple three-wire serial interface which is SPI and Microwire compatible. Additional features include on-chip functionality to facilitate system-level calibration, temperature sensor, voltage sag detection, and phase compensation.

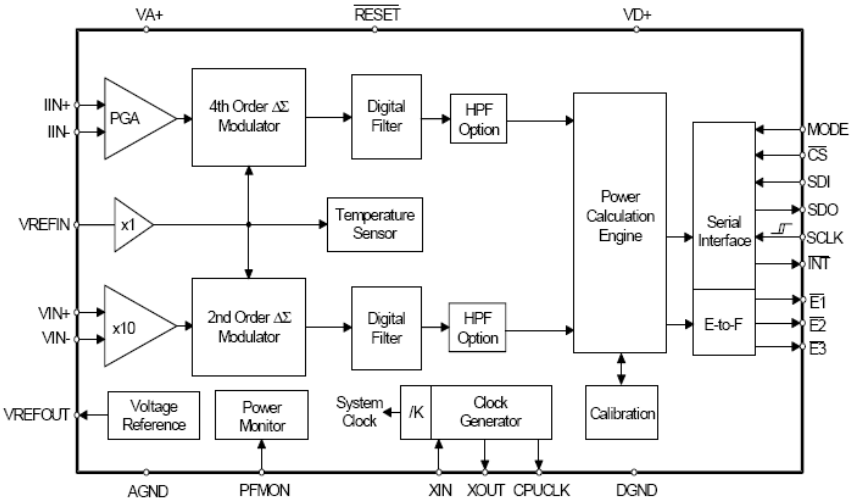

Figure 3-3 Block diagram of the CS5463

The maximum differential input range for current and voltage analog channels is 500mV peak-to-peak. Therefore, the power line voltage and current need to be conditioned so that the dynamic range falls within the allowed input range.

In this case, the maximum rated levels for the meter node are $250V_{RMS}$ and $16A_{RMS}$. To prevent over-driving the channel inputs, the values registered for the maximum rated RMS input levels will not exceed the 90% in V_{RMS} and I_{RMS} by design. Fig. 2 shows the electric schematic diagram of the data acquisition circuit.

The power line voltage is decreased by means of a voltage divider comprised of R9 and R10 with values of 500kΩ and 300Ω respectively. The load current is sensed by measuring the

voltage drop across a current shunt resistor (R28) with a resistance value of 0.010Ω. This solution results in the following input ranges:

Voltage channel: $$\frac{250V_{RMS}}{R9+R10}\cdot R10 = 150mV_{RMS} \rightarrow \frac{150mV_{RMS}\cdot\sqrt{2}}{250mV} \approx 0.85$$

Current channel: $$16A_{RMS}\cdot 0.01\Omega = 160mV_{RMS} \rightarrow \frac{160mV_{RMS}\cdot\sqrt{2}}{250mV} \approx 0.9$$

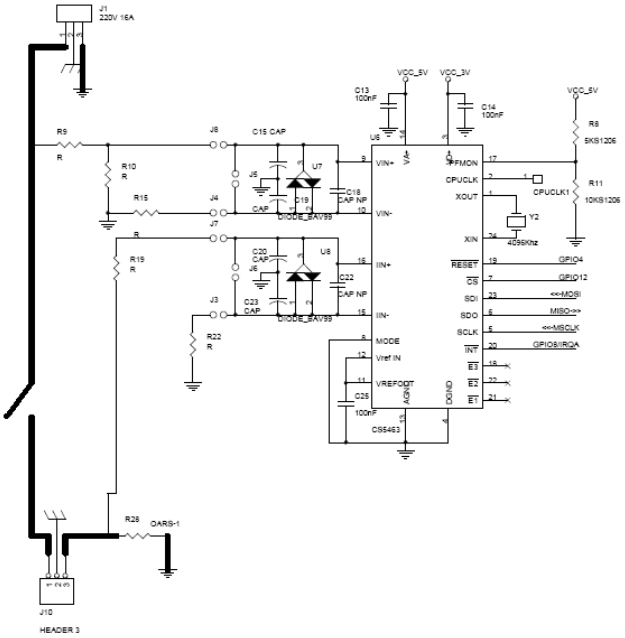

Figure 3-4 Electrical parameters data acquisition

3.1.1.4Microcontroller and RF transceiver

In order to shorten the time and costs of development and prevent EMC problems a commercial module integrating the processing unit and the RF hardware has been used in the meter nodes. The ETRX2 module from Telegesis (Fig. 3) is a small form factor module (37.5 x 20.5 x 3.2 mm) containing the chip EM250 from Ember Corp., a 24MHz reference crystal and RF front-end circuitry optimized for best RF performance. The EM250 is a single-chip solution that integrates a 2.4GHz, IEEE 802.15.4-compliant transceiver with a 16-bit XAP2b microprocessor, 128kB of embedded Flash memory and 5kB of integrated RAM for data and program storage. The EM250 software stack employs an effective wear-leveling algorithm in order to optimize the lifetime of the embedded Flash.

Figure 3-5 **ETRX2 module**

The transceiver utilizes an efficient architecture that exceeds the dynamic range requirements imposed by the IEEE 802.15.4-2003 standard by over 15dB. The integrated receive channel filtering allows for co-existence with other communication standards in the 2.4GHz spectrum such as IEEE 802.11g and Bluetooth.
To support user-defined applications, a number of peripherals such as GPIO, UART, SPI, I2C, ADC, and general purpose timers are integrated.

The ETRX2 is connected to the main board (Fig. 4) through a Harwin 1.27mm pitch board-to-board connector (Harwin part number M50-3601042 for the header; M50-3101042 for the socket). In order to reduce material costs the module might be soldered to the main board as an SMD component.

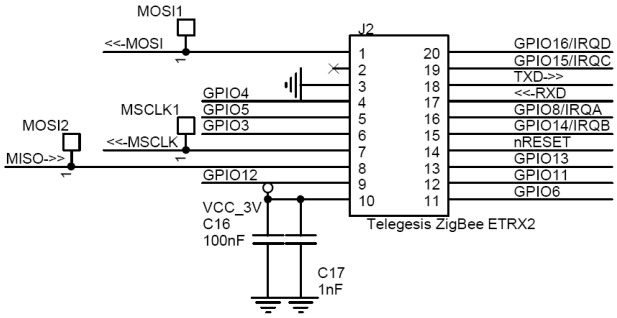

Figure 3-6 Pin signals of the ETRX2 connector

3.1.1.5 Load connection control

The control of the load connection to the grid is implemented by means of a static switch consisting in the BTA16 TRIAC (Triode for Alternating Current) from ST and the MOC3043 driver from Fairchild Semi (Fig.5).
Unlike electromechanical relays, solid-state devices as TRIACS have no moving parts to wear out and they are able to switch on and off much faster. There is no sparking between contacts which eliminates the problem with contact corrosion, thus increasing its service life. Solid-state relays rise as a good solution for switching electrical loads of low and medium current at domestic level.
The MOC3043M driver is an optocoupler performing the function of zero voltage crossing detection and is used to interface the low voltage digital system to the equipment powered from 230Vac lines. Thanks to the zero-crossover switching the circuit is never interrupted in the middle of a sine wave peak, thus avoiding large voltage spikes due to sudden magnetic field collapse around the inductance produced by untimely interruptions in circuits containing substantial inductance.

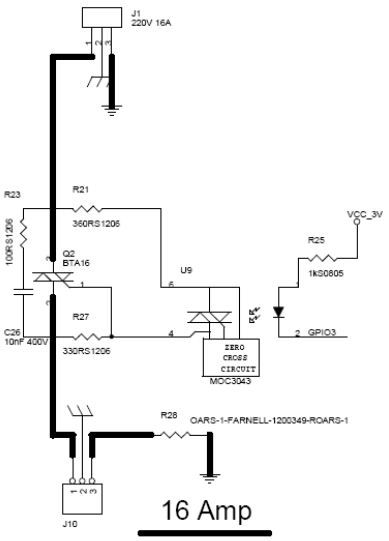

3.1.1.6Power supply

Powering the electronic components of the meter nodes may not be challenging considering the only issue of reducing the 230Vac power line voltage to the low voltage required by such

digital circuitry. However, the high energy efficiency and reduced size requirements of such distributed metering infrastructure have forced to solve the power supply with an efficiency-aware design comprising low number of components (Fig. 6).

The BPS 01-8-00 from Bias Power is an AC-DC switching power supply in a small package module providing up to 1Watt of output power at 8VDC from a 90-285 Vac line. This power solution is intended to replacing current standby power applications in appliances and consumer electronics due to its good efficiency and very low no-load input power, as well as to not requiring additional external components. The output voltage is decreased to 5VDC required by the analog part of the CS5463 IC and to 3.3VDC necessary for the right operation of the digital part of the CS5463 IC, the microcontroller, the radio and the rest of digital circuitry.

Fixed output low dropout linear voltage regulators have been used as a well balanced trade-off solution between cost, size and efficiency. The selected voltage regulators are the MC78LC50 for the 5V and the TPS76333 for the 3.3V.

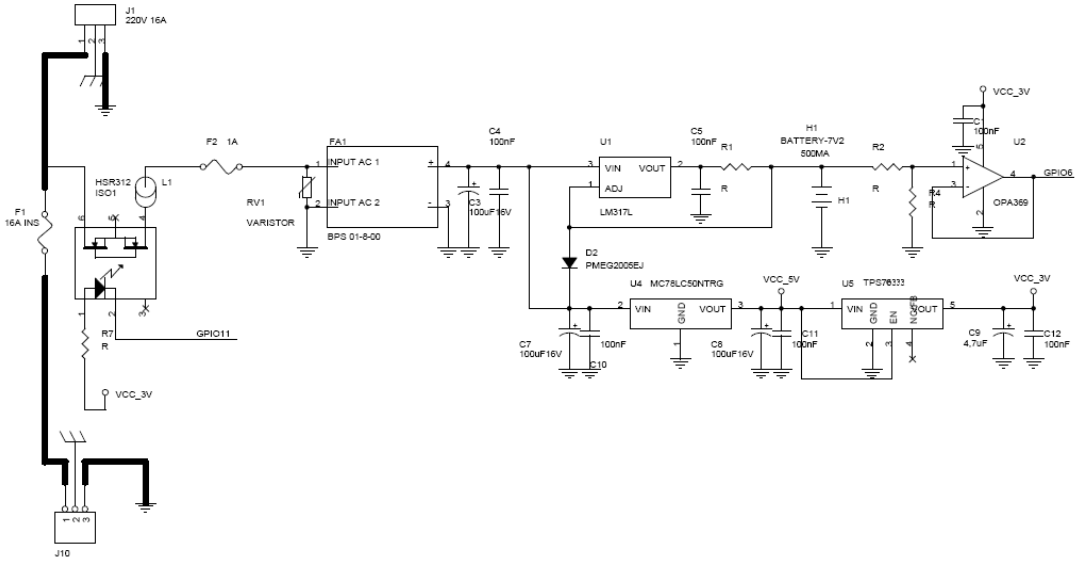

Figure 3-7 Power supply and power management circuit

The use of a battery as primary or auxiliary source of power has been also considered in order to allow the implementation of different power management strategies. As an example, let's imagine the scenario where real-time operation is not a priority requirement for the monitoring system and a resolution of several seconds or few minutes is acceptable. Also, assume that load switching is disabled. In such a case, the microcontroller and the radio in the meter nodes might "sleep" during the periods of inactivity, thus reducing dramatically the energy consumption of the meter node. This would permit a well-sized battery to power the node for long periods and would eliminate the energy losses due to the AC-DC conversion.

By mounting few components onto the board and running the correspondent power management algorithms in the microcontroller, a meter node can operate from a battery. The battery management consists in disconnecting the AC-DC power supply from the AC line by means of the HSR312 solid state switch and let a NiMH battery to feed the digital electronics, sense the battery state of charge by means of an ultra-low power operational amplifier based circuit and an ADC of the ETRX2 and, if necessary, permit the charge of the battery through the current regulator LM317 by connecting again the AC-DC power supply to the AC line. This relatively simple battery charge control is only possible if using NiMH batteries, since these batteries only require given constant input current for charging, no matter the voltage, and

during discharge the voltage decreases gradually. However, special care must be taken regarding overcharging since these batteries tend to heat as current tries to get in when it is full.

3.1.1.7Data logging capabilities

The meter node can be equipped with a SPI real-time clock (RTC) to allow for data logging. Part of the RAM memory of the ETRX2 can be used to store a small amount of data related to measurements and its correspondent time stamp. The stored data would be transmitted at a preset time. An ultracapacitor provides energy to the RTC in case that no energy source is available in the node (NiMH battery or AC power) in order to keep it on time.

3.1.1.8 Meter Node's Firmware

The code that implements the ZigBee communication protocol and the functionalities of the meter node has been developed in the Cambrige Consultants proprietary development environment xIDE. Cambridge Consultants Ltd. is the designer of the XAP2b 16-bit microprocessor integrated in the EM250 chip. Ember Corp. provides the software implementation of the ZigBee stack for this particular microprocessor together with a set of tools for allowing the application developers to design, develop, implement and test their ZigBee based applications.

ZigBee allows the elements of the network to link to each other in a mesh topology, thus increasing the network reliability and range at lower radio power. A tipical ZigBee wireless network (Fig. 7) consists in ZigBee End Devices (ZED), ZigBee Routers (ZR) and a ZigBee Coordinator or Concentrator (ZC). A ZED contains just enough functionality to talk to the parent node (either the coordinator or a router); it cannot relay data from other devices and are intended to work at low duty cycles of activity. A ZR can act as an intermediate router, passing on data from other devices, as well as running an application function. The ZC is the most capable device and might bridge to other networks. There is exactly one ZC in each network since it is the device that started the network originally. Since ZRs and ZCs are critical for network integrity, they must remain in active mode, hence consuming always energy.

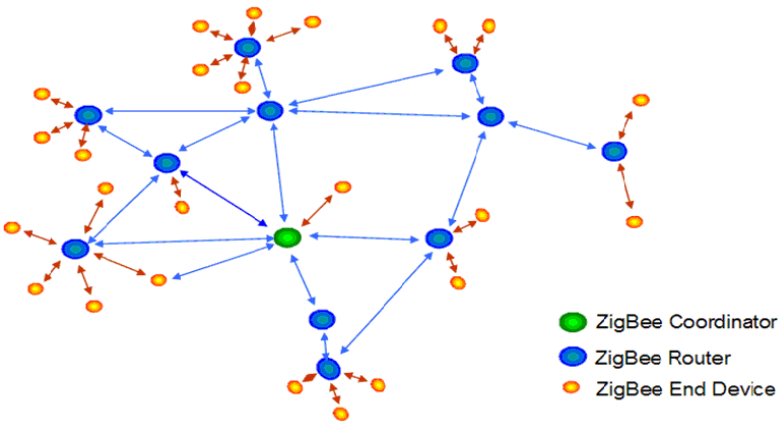

Figure 3-8 Typical ZigBee wireless network

In the INTEGRAL project, the meter nodes forming the network are the source of data for the DMS while, at the same time, are the actuators of the system. In order not to introduce any disturbance in the life of the end user and given that the DMS is intended to take the control of the electrical loads within the home area, the stability and integrity of the system and the network are a must. In this sense, it is essential to have low latency between command execution in the DMS server side and the action fulfilment in the meter nodes side. For this reason, a mesh network topology made up only of ZRs has been implemented for this project (Fig. 8). The meter nodes are configured as routers and perform network maintenance actions (periodic check of neighbour nodes, periodic announcement to coordinator, etc.) as well as application defined actions (electric parameters measurement and transmission, response to remote commands, etc.). This approach improves the stability, integrity and overall performance of the system as well as facilitating its commissioning at expenses of greater energy consumption.

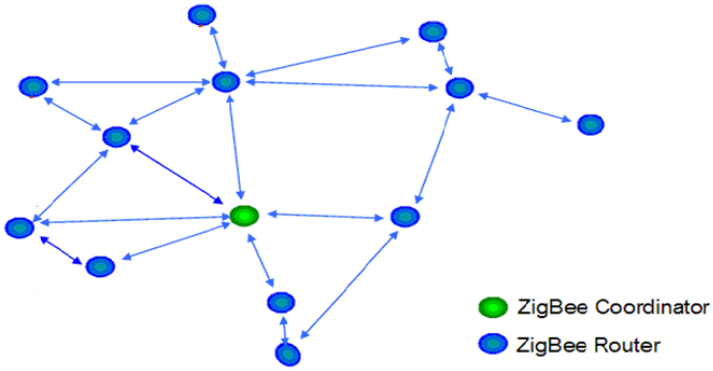

Figure 3-9 INTEGRAL ZigBee mesh network

A ZigBee network is defined by the RF channel (IEEE802.15.4 defines 16 channels) and the PAN ID, which is a 16-bit unique identifier chosen by the coordinator at the time the network is formed. Meter nodes have a preset fixed channel and PAN ID. When a meter node is first plugged, it waits for the periodic coordinator advertisement, which will be received as they share the same channel and PAN ID. Once the coordinator has registered the new meter node and the meter node knows who the coordinator is, the meter node starts measuring the electric parameters of the outlet it is plugged to. A meter node performs continuous computation cycles, each cycle computing 4000 instantaneous voltage and current measurements in one second. By performing continuous computation cycles, the meter node can determine the AC line frequency, which is also used in the determination of the reactive power and the power factor. Figure 9 shows an approximation to the real flow diagram implemented in the firmware. In fact, the particular event-driven process structure of the ZigBee stack keeps the user's application running inside a higher level loop, where network related events have priority over user's application events.

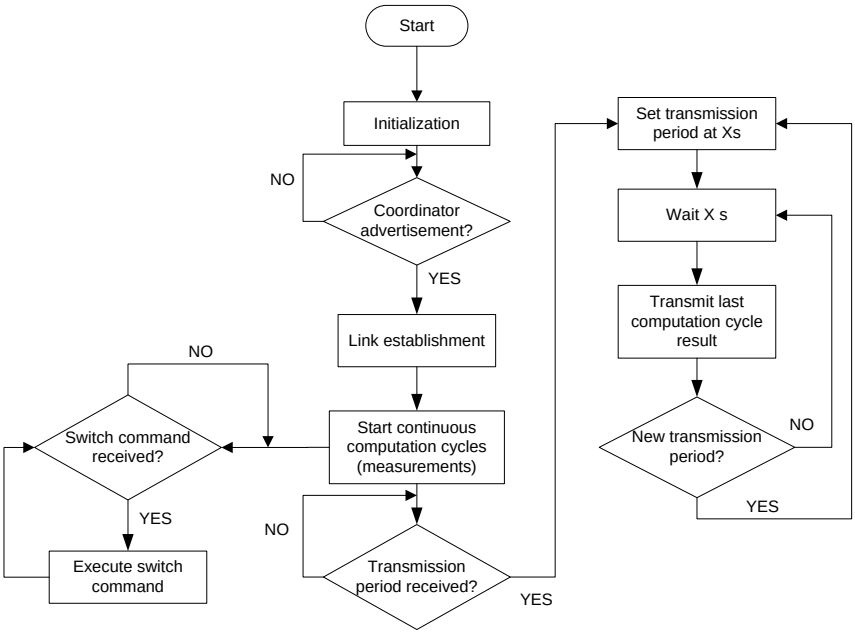

Figure 3-10 Meter node firmware data flow

The DMS sets remotely the measurement transmission period of the meter node and from this moment on, the node transmit the result of the last computation cycle at the end of each transmission period. The meter node does not aggregate nor average previous computation cycles so the DMS is blind against voltage and current variations within the transmission intervals. This limitation poses the question on the suitable transmission period that will actually define the DMS sample rate.

ZigBee provides low transmission rates and does not support heavy traffic through the network. It is highly undesirable to have a 20-node network transmitting measurements every second because the network would collapse, leading to the loss of messages.

Several tests carried out in the INTEGRAL project prove that the suitable transmission period increases with the number of meter nodes. A rule that has demonstrated good results consists in setting the transmission period with the number of nodes in the network, e.g. meter nodes transmitting every 20 seconds in a 20-node network. The transmission period may change dynamically as the coordinator detects new nodes.

3.1.1.9 Power consumption of the metering network

Given that the INTEGRAL project aims to proof that the use of ICT facilitates microgrid's management so as to improve its performance, it is essential that ICT system do not compromise the energy efficiency of the overall setup. The intelligent DMS makes use of a network of meters spread over the area to monitor and control individual loads. Therefore, the more the loads to be monitored, the more the meter nodes to be installed and the energy devoted only to the management of the microgrid.

The power consumption of the meter nodes has been evaluated by measuring the input current in working mode. A 100Ω resistor connected in series with the device has been used to monitor the waveforms of the current through the device. The waveforms (Fig. 10) show the typical non-linear behaviour of a switch-mode power supply when viewed as an AC load. A switch-mode power supply conducts current in short pulses that are in phase with the line voltage and are a source of distortion in the network current. The harmonic distortion of a load

current decreases the average power transferred to the load and is an important factor in the calculation of the true power factor of a load, which describes the decrease in average power transferred due to harmonics and to phase shift between voltage and current. Switch-mode power supplies with similar features of the one used in the meter nodes typically have a power factor around 0.6. The non-zero value of the current between the current peaks is due to the current through the AC voltage divider formed by R9 and R10.

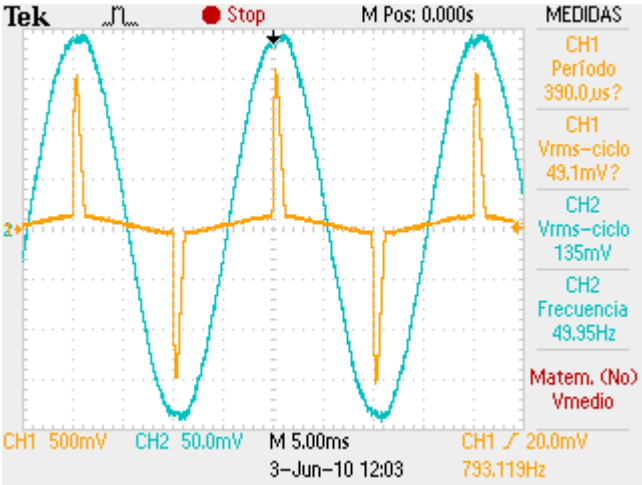

Figure 3-11 Input current waveforms of the AC-DC power supply

The measurement of the input RMS current at 222.3Vac$_{RMS}$ in several nodes results in average input RMS current of 6.804mA when the TRIAC is untriggered (load disconnected) and 7.205mA when the TRIAC is triggered (load connected). Assuming a power factor of 0.6, the active power consumed by a meter node results in 0.9075W and 0.96W respectively.
In order to evaluate the efficiency of the power supply integrated in the meter nodes, the input power must be compared against the output power, which is the power consumed by the electronics inside the node (Table 1). The measured current at the output of the power supply with the TRIAC untriggered is 41.5mA at 8.28Vdc, resulting in an output power of 343mW. According to these figures, the efficiency of the power supply is near 42% with the TRIAC untriggered, and near 45.5% with the TRIAC triggered. The numbers differ slightly with respect to the specifications of the power supply (Fig. 11), since the component is supplying around the 35% of the maximum output power (1W), which should lead to more than 50% of efficiency.

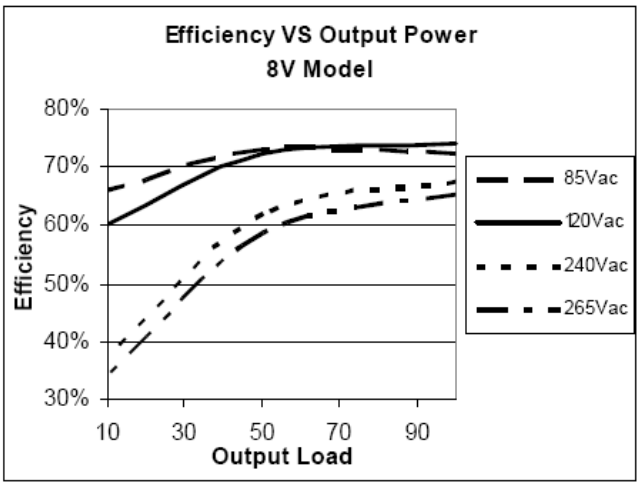

Figure 3-12 Power supply efficiency. Output load in % of max. load

Such difference may come from an erroneous estimation of the power factor. However, a tailored power supply should be designed for this purpose in order to maximize the power supply efficiency and therefore the energy consumption of the meter nodes.

Component	Operation voltage	Operation current	Power consumption
ETRX2	3.3Vdc	35.5mA	117.15mW
CS5463	3.3Vdc, 5Vdc	-	11.6mW
2 x LED	3.3Vdc	2.4mA	7.92mW
TRIAC driver	3.3Vdc	5.9mA	19.8mW
Total (TRIAC off)			**136.67mW**
Total (TRIAC on)			**156.47mW**

Table 1 Power consumption of the electronics according to the design

As an example, in the case the DMS manages a microgrid by monitoring and controlling a demand consisting in 20 individual electrical loads, the power consumed permanently by the metering network of 20 meter nodes would be at least near 18.15W, similar to the power of a low-energy CFL light-bulb.

3.1.2 Software Requirements

The primary requirement for this application is the Java Virtual Machine. The core of the system is built using Java. However the Jade Frameworks allows the cooperation with systems that work on .NET framework.
Regarding the Databases this is optional for monitoring purposes.

3.1.3 Communication Protocols

The agent communication is based on TCP/IP communication. Jade implements the Message Transport System, also called Agent Communication Channel (ACC),which is the software component controlling all the exchange of messages within the platform, including messages to/from remote platforms. The default Message Transport Protocol implementation in JADE uses the HTTP protocol in compliance to the FIPA specification.

3.1.4 Interaction with other actors (DSO,DMS,etc)

The system developed here is an experimental one. The real application that should be deployed in the future suggests that the MGCC is situated in the substation level as illustrated in the next figure.

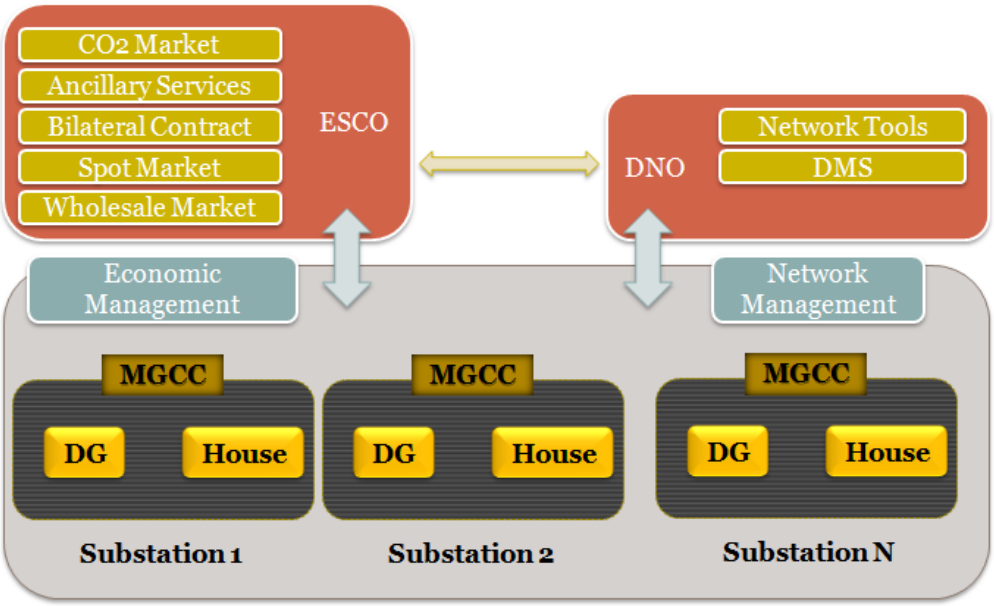

Figure 3-13 System Overview

The MGCC will directly receive messages (and be controlled) by an Retail(ESCO) company. The DNO will interact with the ESCO only. However this is subject to the legal framework of each country and the level of unbundling (in some countries the retail company is also the DNO).

4. Demo C

4.1 Short Description

Demonstrator C is an industrial demonstration dedicated to distributed generation and control in emergency operation. The aim of this demonstrator is to provide solutions to reduce outage time and operation costs due to a fault occurrence within the network.

One of the new ideas that recently emerges to protect the EPS against catastrophic failures is the use of self-healing approaches (SHA). The objective of these advanced approaches consists consecutively in detecting, localizing and isolating the fault before re-supplying the maximum of consumers who were affected by the disturbance: once it is determined that a wide area of the system has been perturbed, SHA breaks up the system into small parts to reduce the effects of the fault occurrence by limiting them to the smallest part. The sane parts of the network can be re-supplied, improving the SAIDI and SAIFI indexes (reliability). The entire system could therefore be restored after the disturbance is eliminated. The speed of reaction has a large impact on the quality of service to the customers.

However, fault location in distribution networks always is complex due to the non-homogeneity of lines, fault resistance ignorance, load uncertainty and unbalance. The fact that a feeder has many branches adds a major difficulty in locating the fault although the fault distance from a substation could be evaluated. In order to determine exactly the faulty section when a fault occurs in distribution network with or without DER, an interesting approach which combines fault indicators (FI) states with fault distance computation will be developed.
In general, SHA is expected to include the three following high level functions:

- fault distance computation
- fault location and isolation by combination of FI states with fault distance computation
- fault isolation and service restoration.

4.2 System Requirements for the Demonstrator C

4.2.1 Hardware Requirements

The Demo C consists in a μnetwork which is a reduced dimension of a real distribution network (EDF) implemented in Electrical Engineering Laboratory of Grenoble. Every electrical element, like distribution lines, transformers, generators, loads, asynchronous machines, are real but with a reduced dimension in order to function in 400V experimental level instead of 20kV level.

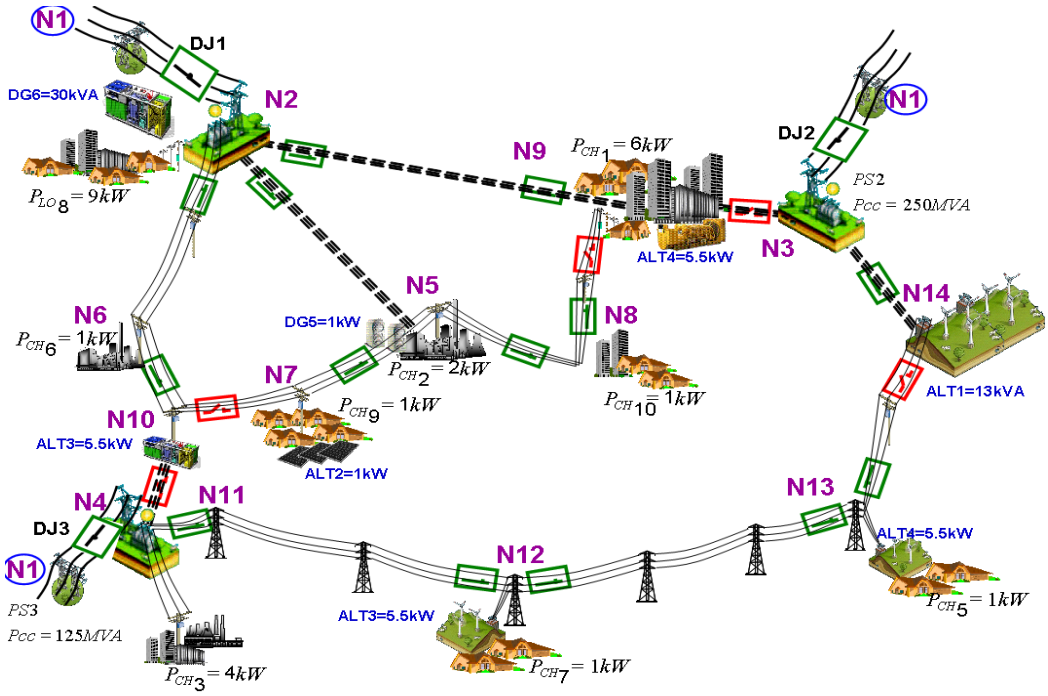

Figure 4-1. Topology of the EDF distribution feeders

4.2.1.1 Distribution network

The real distribution network has a 30 MVA rated power at 20 kV. In order to represent the behavior of a real network, and satisfy economical conditions, the network of test bench of 30kVA, 0.4kV was adopted.

The scale reduction of the µGrid components is carried out by relying on the power and voltage reduction ratios to assure the similarity between real network and µGrid. The impedances of line and transformer are reduced from the real network as shown in equation 1:

$$z\,(\Omega) = \frac{\mu^2}{\lambda}.Z\,(\Omega) \qquad \text{Eq.1}$$

where

$$\lambda = \frac{S_{\mu Grid}}{S_{Real\ Grid}} = \frac{30kVA}{30MVA} = \frac{1}{1000}$$: is the power reduction ratio

$$\mu = \frac{U_{\mu Grid}}{U_{Real\ Grid}} = \frac{400V}{20kV} = \frac{1}{50}$$: is the voltage reduction ratio.

The reduction values of line impedance and the power of corresponding load and generator for µGrid are given in Table 4-1.

Line	From	To	Type	Description	Rbase	Impedance/km (Ohms/km)		Longueur (Ohms/km)	Valeurs Load Flow		Valeurs réelles		Valeurs réduites		Rbase (Ω)	Valeurs réduites (p.u)	
									R pu	X pu	R(Ohm)	L (mH)	R(Ohm)	L (mH)		R(p.u)	X(p.u)
1	N1	N2	TR	autotransfo	4	NA	NA	NA	0,000	0,800	0,00	10,19	0,00	4,07	1,6000	0	0,800
2	N1	N3	TR	autotransfo	4	NA	NA	NA	0,000	1,600	0,00	20,37	0,00	8,15	1,6000	0	1,599
3	N1	N4	TR	autotransfo	4	NA	NA	NA	0,000	1,600	0,00	20,37	0,00	8,15	1,6000	0	1,599
4	N2	N6	A	Almelec 148mm²	4	0,224	0,350	10000	0,559	0,875	2,24	11,14	0,89	4,46	1,6000	0,559	0,875
5	N2	N5	A	HN33S23 240 mm	4	0,125	0,108	8000	0,250	0,216	1,00	2,75	0,40	1,10	1,6000	0,25	0,216
6	N2	N9	A	HN33S23 150 mm	4	0,266	0,117	20000	1,330	0,585	5,32	7,45	2,13	2,98	1,6000	1,33	0,585
7	N5	N7	A	Almelec 54mm²	4	0,613	0,350	5000	0,766	0,438	3,07	5,57	1,23	2,23	1,6000	0,76625	0,437
8	N5	N8	A	Almelec 54mm²	4	0,613	0,350	4000	0,613	0,350	2,45	4,46	0,98	1,78	1,6000	0,613	0,350
9	N6	N10	B	Almelec 148mm²	4	0,224	0,350	1000	0,056	0,088	0,22	1,11	0,09	0,45	1,6000	0,0559	0,087
10	N10	N7	B	Almelec 54mm²	4	0,613	0,350	1000	0,153	0,088	0,61	1,11	0,25	0,45	1,6000	0,15325	0,087
11	N9	N8	A	Almelec 54mm²	4	0,613	0,350	4000	0,613	0,350	2,45	4,46	0,98	1,78	1,6000	0,613	0,350
12	N3	N9	B	HN33S23 150 mm	4	0,266	0,117	1000	0,067	0,029	0,27	0,37	0,11	0,15	1,6000	0,0665	0,029
13	N10	N11	B	HN33S23 95 mm²	4	0,316	0,128	500	0,039	0,016	0,16	0,20	0,06	0,08	1,6000	0,03948	0,016
14	N3	N14	A	HN33S23 95 mm²	4	0,316	0,128	5000	0,395	0,160	1,58	2,04	0,63	0,81	1,6000	0,39475	0,160
15	N11	N12	A	Almelec 148mm²	4	0,224	0,350	30000	1,677	2,625	6,71	33,42	2,68	13,37	1,6000	1,677	2,624
16	N12	N13	A	Almelec 148mm²	4	0,224	0,350	30000	1,677	2,625	6,71	33,42	2,68	13,37	1,6000	1,677	2,624
17	N13	N14	A	Almelec 148mm²	4	0,224	0,350	10000	0,559	0,875	2,24	11,14	0,89	4,46	1,6000	0,559	0,875

Table 4-1 Topology parameters for demonstration C

Where: A: with point of short-circuit in the middle of the line;
B: without point of short-circuit in the middle of the line;

The reduced network will respect the static behavior of the real one. But the demonstrator has also to reproduce the dynamic response of it.

4.2.1.2 Sources and loads

The dynamic components in the network are mainly synchronous generators and their control command systems, because every DERs are represented as micro synchronous generators for self-healing testing
The magnetic and mechanical similarities are taken into account. The choice of the dedicated machine for the µGrid should be determined carefully so that all the similarity conditions are satisfied.

The magnetic similarity, that means the synchronous reactance, transient and sub-transient reactance in reduced per unit value must be equal to the ones of the machine being represented. Meanwhile, for small size generators, the reactance values are much lower, in reduced value, than for large size generators. For a given synchronous generator from a manufacturer, the synchronous reactance and the magnetizing curve are predefined, but it is possible to vary within a certain limit the transient and sub-transient reactance without significantly modifying the others by adding a series reactance. This additional reactance sensibly increases the transient and sub-transient reactance without causing any modification on the others reduced characteristics.
Mechanic similarity condition is expressed by the equality of launch time of the rotor. That means that the following equation must be satisfied:

$$\frac{i\omega^2}{p_n} = \frac{I\Omega^2}{P_n} \qquad \text{(Eq.2)}$$

where: I, ω and p_n is inertia moment, rotation speed and nominal power respectively of micro generator.
I, Ω, Pn is inertia moment, rotation speed and nominal power respectively of real generator.
From an energy point of view, equation 2 can be expressed as:

$$\frac{\frac{1}{2} i\omega^2}{\frac{1}{2} I\Omega^2} = \frac{p_n}{P_n} \qquad \text{(Eq.3)}$$

$$\frac{W_{\mu\_kinetic}}{W_{real\_kinetic}} = \lambda \qquad \text{(Eq.4)}$$

That means that the inertia moment of micro generator should be assembled so that the kinetic energy stored at the nominal speed in the masses of micro and real generator must be proportional to power reduction ratio of two machines. This condition could be done by adding to the moving part of micromachine a flywheel which gives to the generation system the correct reduced inertia [EDF-1996].

The behavior of the real network has been carefully reproduced. To build the required functionalities for the self healing approach on this network, an ITC platform is now mandatory. The general architecture of this platform is shown in Figure 4-2.

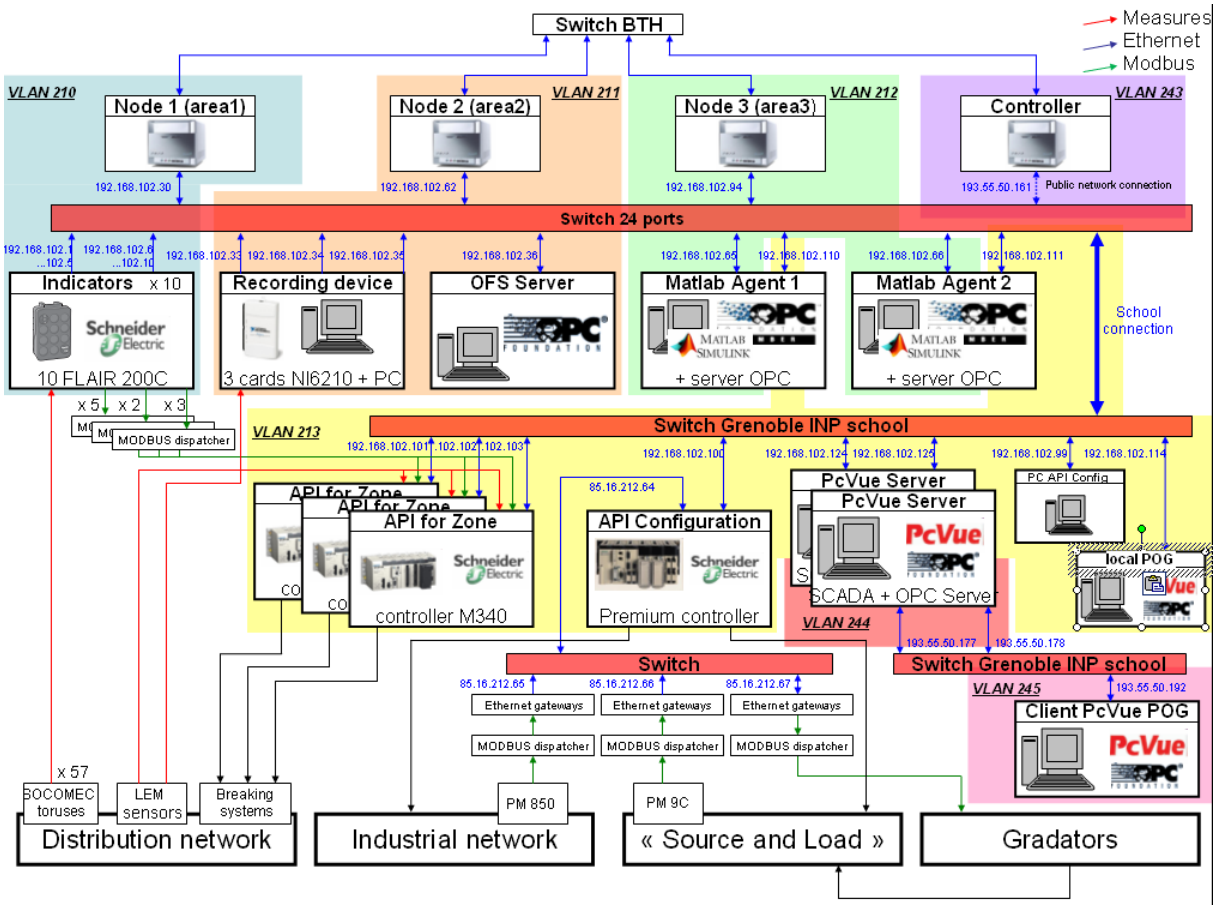

Figure 4-2:General ICT architecture of Demo C

4.2.1.3 Fault indicator

The fault inidators (FIs) are one of the keys elements of the architecture of the Demo C. They are microprocessor based measurement devices, including interface unit to communicate with the local agent.

- It has been chosen to use the communicating fault passage indicator for MV/LV substation FLAIR 200C. The Flair 200C is a product of Schneider Electric dedicated to remote supervision of the MV/LV substation to facilitate fault finding on MV networks and transmit this information in real time to the control centre.

Main functions of Flair 200C

- Detection and storage of fault currents
- Detection of power off and voltage dips
- Recording of the information coming from 6 digital inputs
- Sending commands via 3 outputs
- Remote data transmission
- Transmission of information to the control centre
    - By the control system via the Modbus communication protocol
    - Via an RS232 or GMS data link
    - Transmission of information by SMS messages

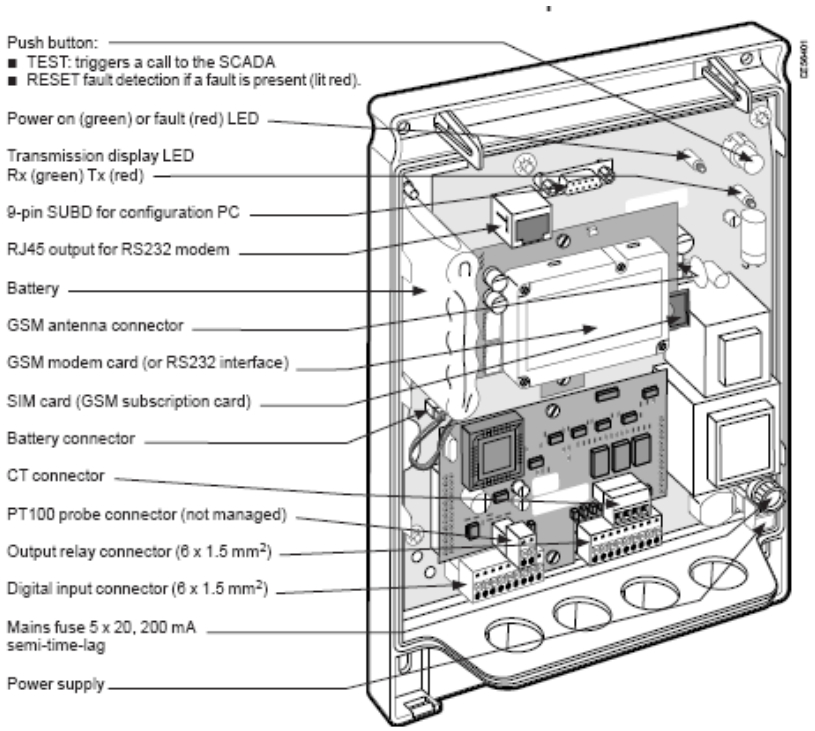

Figure 4-3. Communicating fault passage indicator for MV/LV substation FLAIR 200C

4.2.1.4 Fault recorder

A fault recorder could be defined as a data recorder coupled to voltage and current measurements. The choices which have been done for the both devices will be exposed in the following parts.

4.2.1.4.1 Data recorder

Several solutions were plausible to build the data recorder. Among them, we have chosen to use a data acquisition card connected to a PC to make the visualisation of the data easier. The data acquisition card we choose is the NI USB 6210.

Figure 4-4: data acquisition card NI USB 6210

The characteristics of the chosen card are presented in the Table 4-2

Form factor	USB
Operating System/Target	Windows , Linux , Mac OS
Measurement Type	Voltage
Analog Input	
Channels	16 single ended, 8 differential
Maximum Voltage range	-10 V, 10 V
On-Board Memory	4095 samples
Output	
Analog output	None
I/O Digital Chanel	None
Input-Only Digital Channels	4
Output-Only Digital Channels	4
Counter/Timers	
Counters	2
Max Source Frequency	80 MHz

Table 4-2: Characteristics of the data acquisition card

The main advantage of this data acquisition card is that, once the NI DAQmx driver is installed, the card is directly recognized by LabVIEW, which make the use even easier. The card so has to be connected with a computer. In this demo, three usual personal computers have been used. Their characteristics are gathered in Table 4-3

	Recording device 1	Recording device 2	Recording device 3
Brand and type	Dell optiplex 260	Dell optiplex 280	
Processor	2.66 GHz	3 GHz	
Operating system	Windows XP pro 2002 service pack 2	Windows XP pro 2002 service pack 3	
ram	2 Giga	2 Giga	

Table 4-3: Characteristics of the PC used for fault recording

To make the fault recorder operational, the data card acquisition has to be completed by voltage and current measurement devices.

4.2.1.4.2 Current and voltage sensors

The signals used for self-healing functionalities are fault current, voltage in instantaneous value and/or RMS value. All analog signals are transformed via an A/D (Analog/Digital) transducer to binary format suitable (e.g. 4-20 mA).

The current and voltage transformer and transducer are chosen among the following options:

	LA 55-P/SP1	**LV 25-P**
Measurement Type	Current	Voltage
Primary nominal current rms	50 A	10 mA
Current range	2A to ±100A	0A to ±14 mA
2A to ±100A	25 mA	25 mA
Supply voltage (±5%)	±12 to 15 V	±12 to 15 V
Accuracy	• @I_{PN}, T_A=25°C ±12 15V: ±0.9% • @I_{PN}, T_A=25°C ±15V: ±0.65%	• @I_{PN}, T_A=25°C ±12 15V: ±0.9% • @I_{PN}, T_A=25°C ±15V: ±0.8%

Table 4-4. Current and voltage sensor parameters

All the information measured from many IEDs implemented in the system, issued when a short-circuit occurs will be gathered and sent, through an OPC server, to several local agents.

4.2.1.5 Agents and OFS server

Local agents and OFS server need some CPU resources to be able to treat the data flow they receive. The hardware characteristics of these two components of the demo C are gathered in Table 4-5.

	OFS server	**Agent 1 &2**
Brand and type	Dell optiplex 960	Dell optiplex 760
Operating system	Windows XP pro 2002 service pack 3	Windows XP pro 2002 service pack 3
Processor	3 GHz	3 GHz
Ram	3.25 Giga	3.25 Giga

Table 4-5: CPU characteristics of the agents and the OFS server

The agents and the OFS server need to be connected to the upper layer of the ICT platform: the nodes.

4.2.1.6 Nodes and switches

The data communication between the two upper layers of the ICT platform comes through a 24 port switch. The Cisco system catalyst 2960 series has been chosen (see Figure 4-5)

Figure 4-5: CISCO 24 ports switch used between the nodes' layer and the agents and OFS server's layer

The nodes themselves are just servers. The characteristics of the ones chosen by BTH are gathered in

Brand and type	Shuttle XPC Glamor
Processor	Intel Dual E2200 2.20GHz
Ram	2 Giga

The raw data collected by the presented hardware will be treated by a software whose requirements will be specified in the following part.

4.2.2 Software Requirements

The agents for the self healing functionalities within the demonstration C are implemented in MATLAB using MATLAB function block in Simulink.

In order to create a prototype model of an SCADA system (distribution operator SCADA system), Open Process Control (OPC), as known as OLE for process control, defined by the OPC foundation [OPC] for supporting open connectivity in industrial is chosen as an option.

The OPC customer application programming corresponding to the self-healing functionalities can be created with OPC Toolbox. That is why the installation of the OPC Toolbox™ software is required to extend the capabilities of the MATLAB 7.1 environment and of the Simulink® simulation environment. Then, the communication between MATLAB and OPC server as well as the fast raw data analysis, measure and control will be easily realized : using OPC Toolbox functions and blocks, you can acquire live OPC data directly into MATLAB and Simulink, and write data directly to the OPC server from MATLAB and Simulink.

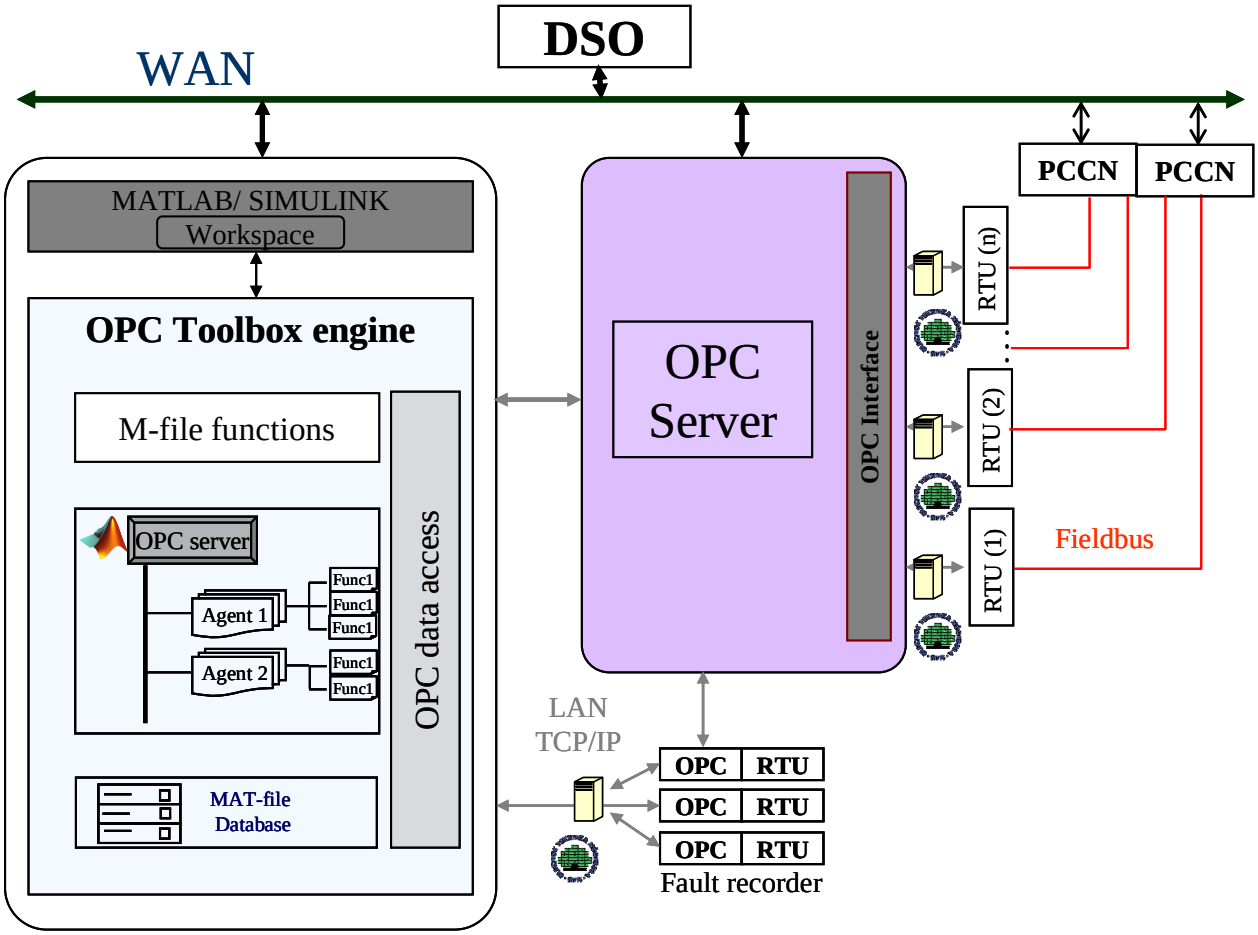

Figure 4-6. Schematic agent operation simulation for Demo C

All measured data are brought into the MATLAB workspace via the data acquisition toolbox from OPC server and RTUs. When the records are acquired, the toolbox stores them in a memory buffer or on disk. The toolbox provides several ways to bring one or more records of data into the workspace where they can be analyzed or visualized.

The following part will present the protocols which allow the RTUs, the OPC server and the agents to communicate between each other.

4.2.3 Communication Protocols

OPC Data Access standard via Ethernet provides the common protocol for communication between OPC server associated with communicant RTU (Modbus/TCP) or with SCADA center and OPC client (MATLAB OPC Toolbox) playing a role as local agent.
Communicating remote terminal unit (RTU) such as fault recorder emulator developed within LABVIEW, fault indicator (Flair 200C) is connected within several LAN. They communicate with some layer PC and local agent via OPC server/client. Finally, the advanced control and batch execution to accomplish self-healing functionalities could be carried out directly from local agent or indirectly from DSO (with the local agent advices).

The conception of the demonstrator C matches with the IEC 61850 standard which is a standard for the design of electrical substation automation. IEC61850 is a part of the International Electrotechnical Commission's (IEC) Technical Committee 57 (TC57) reference architecture for electric power systems. The abstract data models defined in IEC61850 can be mapped to a number of protocols. Current mappings in the standard are to MMS (Manufacturing Message Specification), GOOSE, SMV, and soon to Web Services. These protocols can run over TCP/IP networks and/or substation LANs using high speed switched Ethernet to obtain the necessary response times of < 4ms for protective relaying.

Furthermore, the data format which is used within the demo C should be CIM compliant.

4.2.4 Input & Output Data Requirements

4.2.4.1 Fault detection devices

The fault detection characteristics are similar for FPI and protection relay. A common principle to detect the existence of fault with the protective relay as well as the FPI is to compare fault current at the connection point with preset threshold:

- If the phase current overlaps a given threshold for the three phases fault current ➔ existence of three phases fault,
- If the phase current overlaps a given threshold for two phases fault current ➔ existence of two phases fault,
- Either one phase current overlap a given threshold for single fault current or zero sequence current overlap a given threshold for zero sequence fault current fault ➔ existence of single phase fault.

After, a reclosing sequence can be carried out, if it is not sufficient to eliminate the fault, circuit breaker will be opened and the FPI will be reset to prepare for the localization and service restoration phases.

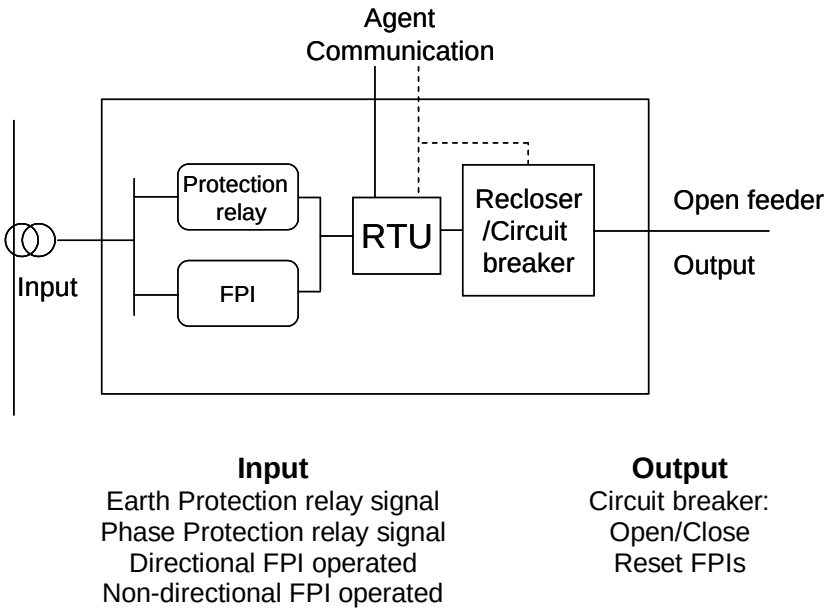

Figure 4-7. Example of fault detection block structure

4.2.4.2 Fault location process

The inputs which are used to localize any fault in the network depend on the type of the fault and on the topology of the network. The most difficulty expected is the case of single-phase fault in a compensated neutral, the phase fault current being low compared with the compensated current (circulating between the distributed capacitance of the network and the Petersen coil) and the load current. This situation induces a high dependence on the accuracy of the measurements and of the parameters evaluation. In this case, a parallel resistance to Petersen coil is needed in order to collect sufficient information to locate the fault. In other words, the proposed method is not available for single phase fault in a full isolated neutral or in full compensated neutral without any parallel resistance. Therefore, a parallel resistance is designed to have a maximal current circulation during the fault (around 20 Amps in France for instance).

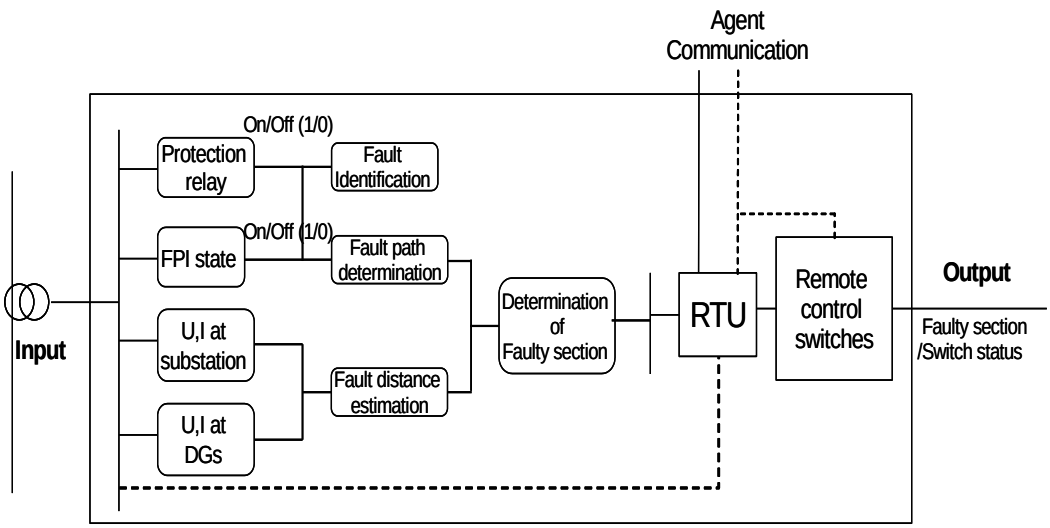

Input	**Output**
U,I at substation	Fault distance from substation
U,I at DGs	Position of faulty section
Parameter of DGs	Fault
Fault recorder	Impedance loop
FPI operated (on/off)	
Protection relay signal (open/close)	
Status of remote control switches	

Figure 4-8. Example of fault localization block structure

For each type of fault, the inputs need to localize fault will be précised as follows:

- Three phase fault:

The fault current contribution comes from the interconnected network and the DR in the same path with the substation to fault point. So the main information to estimate the fault distance in case of three phase fault is the direct impedance of the HV/MW transformer and

of the HV interconnected network (data known by the operator), direct impedance of the conductor sections of the feeder and the measured current during the fault from substation as well as from DR. In case of DR having limited power, its fault current could be neglected.
Fault data in the protection devices or near a fault recorder are able to identify fault type and evaluate of three phase current RMS value, averaging values measured on the three phases and then send to the operator.

- Two phase fault:

Approach to detection and identify two phases fault is similar to the three phase fault in assuming a main contribution of the interconnected HV network and the DR in the same path to fault current.
Fault data in the protection devices or near a fault recorder are able to identify fault type and evaluate of two phase current RMS value, averaging values measured on the two faulted phases and then send to the operator.

- Single phase fault:

Fault data in the protection devices or near a fault recorder are able to identify fault type and evaluate the phase current RMS value on the faulty phase, the phase to earth voltage magnitude on the faulty phase, the zero sequence current measured (1/3 the residual current) and the zero sequence voltage measured during the fault steady-state. The data collected depend also on the grounding system state.

4.2.4.3 Service restoration stage

Knowing the location of the fault, fault isolation requires fast execution of operator to open the switches situated in the two sides of faulty section. After the fault is located and isolated, the operators have to execute several operation to re-energize the sane portion of network and reduce maximum the customers affected by the fault.

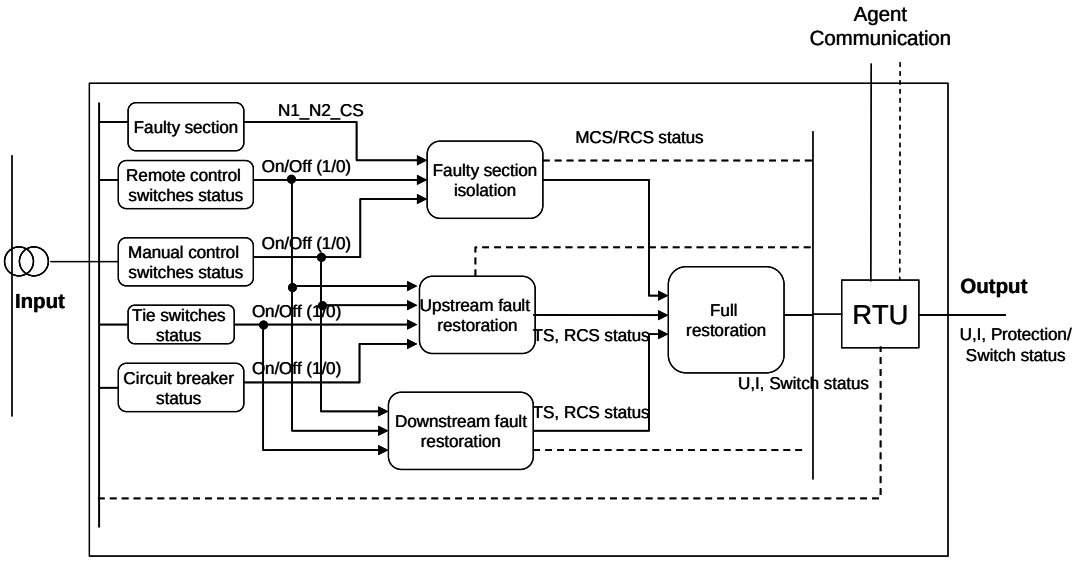

Input
Faulty section (N1_N2_CS)

Output
Status of Switches

Manual control switches (On/Off) Remote control switches (On/Off) Tie switches (On/Off) Circuit breaker (On/Off)	Status of Protection U,I of full restoration network

Figure 4-9. Example of fault isolation and restoration block structure

From the fault position, the network may be divided into two parts: downstream fault part and upstream fault part. In order to reenergize the downstream fault part, the system operators must close the feeder circuit breaker to have the power flow from substation. Whereas, the upstream fault sane portion of network can be supplied by closing the tie switches to connect to other substation.

Input/Output data and the sequence of execution within the isolation and restoration block are presented in Figure 4-9. In this block, input data encompass the faulty section, which has is the output of fault location block, the status of remote control switches, manual control switches, tie switches and the circuit breaker.

5. Conclusions - Analysis of the Demonstrators

The previous sections analyzed the three demonstration sites. The necessary step in order to identify the common architecture is to map the key characteristics and differences. However the fundamental differences are not the hardware structure but the goals of each demonstration site. These goals forced each demonstration to adopt a certain solution and a hardware configuration. Shortly the goals are:

- Demo A focuses on the market participation and the management of consumers or RES. The optimisation process considers the set of variable tariffs as well several constraints (e.g. Congestion Management). The Power Matcher algorithm tries to find the solution of a given objective function (e.g. Cost Minimisation for the consumer).
- Demo B focuses on the operation and critical operations in the LV and MV network. Thus having the management of RES and loads tries to cope with situations like the islanded operation, the black start or the increase of the RES penetration.
- Demo C focuses on emergency situations in the LV and MV network such as short circuit detect and clearance or self healing operations. The system tries to detect fast and accurately any disturbance and clear it in order to affect as less as possible consumers.

The next table summarizes the key differences of the three demonstrators.

	Demo A	Demo B	Demo C
Primary Goal	Cost Minimisation for the consumer, profit maximisation for the retail company, provision of ancillary services	RES penetration maximisation, energy efficiency, network support and ancillary services	Disturbance detection and clearing, self healing, provision of ancillary services
Response time	The Power Matcher system is an event based system that participates and interacts with the wholesale market. The duration of the operation cycle is 24h and the response time in the events may last some seconds or few minutes.	The duration of the operation cycle depends on the type of RES and storage unit. It could be from one hour to 24h. The response time is less than 5sec (depends on the communication infrastructure)	The duration of an event or disturbance may last few milliseconds or some minutes. The disturbance detection or control operation should be done in a very short period of time (ms)
Accuracy	The result of the algorithm is affected by errors in forecasting or measurements.	The result of the algorithm is affected by errors in forecasting or measurements.	The system performance may be affected by problems in communication or in measuring/control equipment. In real operation this is not

	The suboptimal solution will lead to a less efficient operation.	The suboptimal solution will lead to a less efficient operation.	acceptable thus redundant equipment is used.
User Friendliness	The system interacts directly with the consumer, thus it is necessary to have a user friendly interface (Web Portal)	The system of Demo B has limited interaction with consumer. A user interface could be useful.	The system does not interact with consumers. However a user friendly interface should be installed in the DMS for maintenance/monitoring/control
Maintenance	Except the main ICT infrastructure (DB, etc) the rest of the equipment requires limited or no maintenance.	The system requires (not very often) maintenance especially in the measuring equipment.	The system requires regular checking of all the devices. However most of the checking can be done by the central system.
Communication	Internet/Web based communications	Internet (TCP/IP) based communication, industrial control communication protocols (ZigBee,X10 etc)	Specialised industrial communication protocols/systems such OPC UA, UCA DER etc.
Hardware equipment	The system is based on commercial (of the self) components	The system is based on commercial (of the self) components	The system requires specialised components
Software Development Kit	.NET framework	Java (.NET version available)	MATLAB, C/C++
Operating System (for the main server)	Windows	Windows/Linux	Windows
Operating System (for the controllers)	Embedded OS (windows CE?)	Embedded OS (Linux/Windows CE)	Non Available

Table 5-1: Key difference of the three demonstration sites

It is obvious that the differences derive from the different goals of each Demo. The role of each demo is important since it covers different aspect of the power system operation. The next deliverable will provide an integral architecture that merges the three Demos. The Integral system will combine the capabilities of all the three systems and will consider the difference in the system architectures.

6. ANNEX I

Schematic circuit diagram of the meter Node